Syst. Biol. 47(2): 311–335, 1998

Phylogeny of Frogs of the *Physalaemus Pustulosus* Species Group, With an Examination of Data Incongruence

DAVID C. CANNATELLA,[1,2] DAVID M. HILLIS,[1] PAUL T. CHIPPINDALE,[1,3] LEE WEIGT,[4] A. STANLEY RAND,[4,5] AND MICHAEL J. RYAN[1,4]

[1]*Department of Zoology, University of Texas, Austin, Texas 78712, USA; E-mail: (D.M.H.) hillis@bull.zo.utexas.edu, (M.J.R.) mryan@mail.utexas.edu*
[2]*Texas Memorial Museum, University of Texas, Austin, Texas 78705, USA; E-mail: catfish@mail.utexas.edu*

Abstract.—Characters derived from advertisement calls, morphology, allozymes, and the sequences of the small subunit of the mitochondrial ribosomal gene (12S) and the cytochrome oxidase I (COI) mitochondrial gene were used to estimate the phylogeny of frogs of the *Physalaemus pustulosus* group (Leptodactylidae). The combinability of these data partitions was assessed in several ways: measures of phylogenetic signal, character support for trees, congruence of tree topologies, compatibility of data partitions with suboptimal trees, and homogeneity of data partitions. Combined parsimony analysis of all data equally weighted yielded the same tree as the 12S partition analyzed under parsimony and maximum likelihood. The COI, allozyme, and morphology partitions were generally congruent and compatible with the tree derived from combined data. The call data were significantly different from all other partitions, whether considered in terms of tree topology alone, partition homogeneity, or compatibility of data with trees derived from other partitions. The lack of effect of the call data on the topology of the combined tree is probably due to the small number of call characters. The general incongruence of the call data with other data partitions is consistent with the idea that the advertisement calls of this group of frogs are under strong sexual selection. [Advertisement calls; behavior; combined-data analysis; data partitions; frogs; Leptodactylidae; *Physalaemus*; sensory exploitation hypothesis.]

Whether or not to combine data sets has been discussed widely in the recent literature (Bull et al., 1993; Eernisse and Kluge, 1993; Chippindale and Wiens, 1994; de Queiroz et al., 1996). Less discussed is the identification and localization of incongruence among data partitions (but see Huelsenbeck and Bull, 1996; Poe, 1996; Mason-Gamer and Kellogg, 1996; Lutzoni, 1997). It has been argued that if different data partitions are no more different than expected by sampling error, then the data can be combined into a single analysis (Bull et al., 1993). Although there are many reasons to favor a combined analysis (Eernisse and Kluge, 1993; Chippindale and Wiens, 1994), it can be enlightening to examine incongruence among data partitions.

Behavioral data are receiving increasing attention in phylogenetic analysis (de Queiroz and Wimberger, 1993; Foster et al., 1996; Gittleman et al., 1996; Irwin, 1996; Kennedy et al., 1996; Wimberger and de Queiroz, 1996). In this article we use a diverse, original data set from advertisement calls, morphology, allozymes, and the 12S and cytochrome oxidase I (COI) mitochondrial genes to estimate the phylogeny of frogs of the *Physalaemus pustulosus* group (Cannatella and Duellman, 1984). This clade has served as a model for examining aspects of behavioral evolution such as sexual selection and signal-receiver evolution (Ryan and Rand, 1993, 1995; Ryan, 1996). Additionally, we assess incongruence among data partitions with several

[3] Present address: Department of Biology, University of Texas, Arlington, Texas 76019, USA; E-mail: paulc@albert.uta.edu

[4] Smithsonian Tropical Research Institute, Unit 0948, APO AA 34002; Present ddress (L.W.): Field Museum of Natural History, Roosevelt Road at Lake Shore Dr., Chicago, Illinois 60605, USA; E-mail: weigt@fmppr.fmnh.org

[5] E-mail: rand@gamboa.si.edu

methods, and discuss the phylogenetic utility of the advertisement calls of these frogs.

MATERIALS AND METHODS

Specimens were collected in the field, tissues extracted, and the voucher specimens preserved or prepared as skeletons (Appendix 1). Specimens are deposited at the United States National Museum and the Texas Memorial Museum, University of Texas. Some skeletal material was borrowed from the American Museum of Natural History; University of Kansas Museum of Natural History; the Museum of Comparative Zoology, Harvard University; and the Louisiana State University Museum of Natural Science.

Taxon Sampling

The species sampled are listed in Appendix 1. All known valid species in the ingroup were sampled; we treated a population of *P. petersi* that may be referable to the nominal taxon *P. freibergi* (Cannatella and Duellman, 1984) as a distinct taxon. Monophyly of the ingroup is supported by four synapomorphies (Cannatella and Duellman, 1984). Outgroup taxa were *Physalaemus ephippifer*, *Physalaemus* sp. A, and *Physalaemus enesefae*. These species were chosen because our preliminary survey of morphology and calls among 75% of the species suggested that they are the most similar to the *pustulosus* group in external morphology, osteology, and the general characteristics of the call. A more comprehensive phylogenetic analysis of relationships in the genus is in progress.

Data Partitions

The following character sets were designated as data partitions: morphological characters ($n = 12$; MORPHOLOGY), advertisement calls ($n = 12$; CALLS), allozyme electromorphs ($n = 27$; ALLOZYMES), DNA sequence of the cytochrome oxidase I gene ($n = 543$; COI), and DNA sequence of the small subunit of the mitochondrial ribosomal gene ($n = 1214$; 12S). The combined data set was designated as COMBINED ($n = 1808$).

Morphological characters (Appendix 2) were taken from dissections of whole specimens and alizarin-and-alcian–stained skeletons (Dingerkus and Uhler, 1977). Although sample sizes of skeletons for most species were two or three, a survey of >30 skeletons of *Physalaemus pustulosus* (Cannatella and Duellman, 1984) indicated no intraspecific polymorphism in the characters examined, and none was noted in the present study.

Advertisement calls were recorded in the field onto metal tape with either a Sony TCD 5M, Marantz PMD 420, or Sony Professional Walkman using a ME-80 Sennheiser microphone with a K3-U power module and wind screen. Temperatures at the calling sites of each frog were recorded and usually were $25 \pm 2°C$. Such a small temperature differential has no substantial influence on call variation.

The advertisement calls of the *Physalaemus pustulosus* species group (except species C) and the three outgroup species are all similar in that they are rather long frequency sweeps. We refer to these calls as whines, which describes the sound to the human observer. Some species may add to their call a suffix, which is described as a chuck. Túngara, the common name for *P. pustulosus*, is an onomatopoeia for the whine followed by two chucks. Because the whine is the component required for species recognition (Ryan, 1985; Rand et al., 1992; Ryan and Rand, 1995), it is the only call component considered. The whines differ in their spectral properties (the onset, offset, and dominant frequency) as well as in the duration and shape of the frequency sweep. All of the whines have upper harmonics, but in *P. pustulosus* these harmonics have no influence on the calls' attractiveness to females (Rand et al., 1992; Wilczynski et al., 1995). These harmonics are not considered here; all

TABLE 1. Allozyme loci examined, and buffer systems and tissues used. E. C. number = Enzyme Commission number from International Union of Biochemistry (1984). Buffer systems follow Murphy et al. (1996); 1 = Tris-citrate II, pH 8.0; 2 = Tris-citrate-EDTA, pH 7.0; 3 = Tris-borate-EDTA II, pH 8.6; 4 = Tris-citrate/borate, gel pH 8.7.

Locus	Abbreviation	E. C. number	Buffer system
Aconitase hydratase-1	Aco-1	4.1.1.3	1 + NADP
Adenylate kinase	Ak	2.7.4.3	1
Aspartate aminotransferase (mitochondrial form)	Aat-M	2.6.1.1	3
Aspartate aminotransferase (supernatant form)	Aat-S	2.6.1.1	1, 3
Creatine kinase	Ck	2.7.3.2	1
Cytosol aminopeptidase	Cap	3.4.11.1	1
Esterase D	Est-D	3.1.1.-	
Fructose-biphosphatase	Fbp	3.1.3.11	1 + NADP
Glucose-6-phosphate dehydrogenase	G6pdh	1.1.1.49	4 + NADP
Glucose-6-phosphate isomerase	Gpi	5.3.1.9	4
Glutamate dehydrogenase	Gtdh	1.4.1.4	1
Glutathione reductase	Gr	1.6.4.2	1
Glycerol-3-phosphate dehydrogenase	G3pdh	1.1.1.8	2
Isocitrate dehydrogenase-1	Idh-2	1.1.1.42	2
Isocitrate dehydrogenase-2	Idh-2	1.1.1.42	2
Lactate dehydrogenase-A	Ldh-A	1.1.1.27	2
Lactate dehydrogenase-B	Ldh-B	1.1.1.27	2
Malate dehydrogenase-1	Mdh-1	1.1.1.37	1
Malate dehydrogenase-2	Mdh-2	1.1.1.37	1
Malate dehydrogenase-1 ($NADP^+$)	Mdhp-1	1.1.1.40	2 + NADP
Malate dehydrogenase-2 ($NADP^+$)	Mdhp-2	1.1.1.40	2 + NADP
Peptidase A (glycyl-L-leucine)	Pep-A	3.4.-.-	1
Phosphoglucomutase	Pgm	5.4.2.2	2 + NAD
Phosphogluconate dehydrogenase	Pgdh	1.1.1.44	1 + NADP
Superoxide dismutase (supernatant form)	Sod-S	1.15.1.1	2
Triose-phosphate isomerase	Tpi	5.3.1.1	2

values refer to the fundamental frequency.

Spectral properties of calls, except for dominant frequency, were analyzed on a Uniscan sonograph. Temporal properties were analyzed on a DATA 6000 digital waveform analyzer. Calls were digitized at a rate of 20 kHz; therefore the Nyquist frequency is 10 kHz, substantially above the highest frequencies in any of the calls analyzed. The dominant frequency of the call also was analyzed on the DATA 6000 by taking a fast Fourier transform of the entire call. The following call variables were quantified: Duration (TLDUR, msec), frequency at onset of call (INHZ, Hz), maximum frequency (MXHZ, Hz), time to the maximum frequency (TMMX, msec), time to mid-frequency (TMHFHZ, msec), frequency at offset of call (FNHZ, Hz), dominant frequency (DOMHZ, Hz), duration of amplitude-modulated component (AMDUR, msec), rise time (RSTM, in msec), time to mid-rise (TMHFRS, msec), fall time (FLTM, msec), and time to mid-fall (TMHFFL, msec).

Calls and tissues for DNA and allozyme analysis are from the same individuals, except for *Physalaemus pustulosus*, in which they are from different individuals in the same population. The COI and 12S sequence data for *P. pustulosus* were obtained from different individuals, but these came from the same population. Each species is represented by one population; intraspecific variation was not assessed. Although there are significant differences in call parameters within a species (e.g., Ryan and Wilczynski, 1988, 1991), from studies of *Physalaemus*

pustulosus we know that intraspecific variation is far less than variation among the species (Ryan et al., 1996).

Liver, heart, and thigh muscle were dissected from 10 individuals from each population in the field and immediately frozen in liquid nitrogen until transportation to the University of Texas, Austin, at which time they were maintained in an ultracold freezer at less than –70(C. Methods for allozyme electrophoresis followed the horizontal starch gel protocols described by Murphy et al. (1996). Gels were made from 12% starch (Starch Art lot W561-2). Table 1 shows the enzyme loci scored and buffer system used to score each locus. Appendix 1 lists the localities of the specimens examined.

Methods for DNA isolation, amplification, cloning, and sequencing followed Hillis et al. (1996); protocol numbers in the following description refer to that paper. Whole genomic DNA was isolated using protocol 1.

Data partition 12S consisted of the complete mitochondrial 12S rRNA gene, complete valine-tRNA gene, and the adjacent approximately 200 bp of the 16S rRNA gene. These were amplified by the polymerase chain reaction (see Palumbi, 1996) using primers 12Sh and 16Sh (Table 2). The amplified product was cloned using TA cloning (protocol 18, part B). Plasmid DNA was isolated according to protocol 14, and sequenced (protocols 21, 22, and 25) using the primers shown in Table 2. The 12S sequences were aligned using MALIGN (Wheeler and Gladstein, 1992).

The same extracted DNA samples were used to sequence the cytochrome oxidase I gene. DNA from the following species was amplified using the polymerase chain reaction with COIf and COIa primers (Palumbi, 1996): *P. ephippifer*, *P. freibergi*, *P.* sp. B, *P.* sp. A, and *P. pustulosus*. The remaining species were amplified with COIf and COIa2 (designed for these species): *P. coloradorum*, *P. enesefae*, *P. petersi*, *P. pustulatus*, *P.* sp. C. The region of analysis included sites 55–597.

After amplification, the product was separated and excised from an agarose

TABLE 2. Primers used to sequence 12S rRNA, valine-tRNA, and 16S rRNA genes (upper part of table) and COI gene (lower part). The 12S primer locations refer to the positions in the *P. pustulosus* sequence. The designations pp6–pp9 are internal primers for COI.

12S primer name	Primer sequence	Position
12Sa	5′-AAACTGGGATTAGATACCCCACTAT-3′	413–437
12Sar	5′-ATAGTGGGGTATCTAATCCCAGTTT-3′	437–413
12Sb	5′-GAGGGTGACGGGCGGTGTGT-3′	835–816
12Sc	5′-AAGGCGGATTTAGCAGTAAA-3′	754–773
12Sd	5′-TCGTGCCAGCCRCCGCGGT-3′	230–248
12Se	5′-GGGAAGAAATGGGCTACATTTTCT-3′	689–712
12Sh	5′-AAAGGTTTGGTCCTAGCCTT-3′	1–20
12Sk	5′-GGGAACTACGAGCAAAGCTT-3′	475–494
12Sl	5′-GGACAGGCTCCTCTAGGTGG-3′	545–526
16Sh	5′-GCTAGACCATKATGCAAAAGGTA-3′	1202–1180
M13rev	5′-CAGGAAACAGCTATGAC-3′	vector
T7 promoter	5′-AATACGACTCACTATAG-3′	vector
COI primer name	**Primer sequence**	**Position**
COIf	5′-CCT GCA GGA GGA GGA GAY CC-3′	1–20
COIa	5′-AGT ATA AGC GTC TGG GTA GTC-3′	660–681
COIa2	5′-CCT GCY ARY CCT ARR AAR TGT TGA GG-3′	616–641
pp6	5′-TCT GCA ACA ATA ATY ATY GCA ATT CCA AC-3′	256–284
pp7	5′-GTT GGA ATT GCR ATR ATT ATT GTT GCA GA-3′	284–256
pp8	5′-TCT CTA GAY ATT GTA TTA CAT GA-3′	421–443
pp9	5′-TCA TGT AAT ACA ATR TCT AGA GA-3′	443–421

gel and resuspended for a second round of PCR amplification. The product was purified via Geneclean III (BIO 101, La Jolla, California). Cycle sequencing was done with the ABI Prism mix sequencing kit. Sequences were run on an ABI 377 automated DNA sequencer (Applied Biosystems, Perkin–Elmer, Foster City, California) using the manufacturer's recommended protocols. Sequences were read, verified and aligned with the ABI software package SeqEd.

Genbank accession numbers are AF058957-66. The NEXUS file (Maddison et al., 1997) is available at http://www.utexas.edu/depts/systbiol.

Phylogenetic Analysis

Coding of the call variables followed a procedure inspired by Maddison and Slatkin (1990). The minimum and maximum values of a variable (data pooled over all species) were scaled to 0 and 25, respectively (Table 3). The species mean was then scaled monotonically to the nearest integer. Each character was downweighted to unity and analyzed as ordered. In this way the relative distance between each pair of values was maintained, and calculation of homoplasy indices was possible.

Phylogenetic analyses were done using PAUP 3.1.1 (Swofford, 1993) and PAUP* test versions 4.0.0d26–4.0.0d28 (provided by David Swofford). The allozymic data were coded using step matrices so that a fixed change at a locus was weighted as one step in the parsimony analysis, and any intermediate combination of alleles was counted as a half-step. Thus, a change from a fixed to a polymorphic condition or vice versa (e.g., aa to ab, or ab to bb) was counted as a half step, whereas a fixed or mutually exclusive difference (e.g., aa to bb, or ab to cd) was coded as a full step. Parsimony analyses of the DNA data included (1) all character transformations weighted equally, with gaps treated as a fifth character; (2) all character transformations weighted equally, but gaps treated as missing data; and (3) a weighted parsimony analysis in which transversions were given weights of two and five times relative to transitions. These values were based on the substitution matrix estimated by averaging across all most parsimonious reconstructions of characters on an initial unweighted tree using MacClade (Maddison and Maddison, 1992). Maximum-likelihood analyses included (1) a one-parameter analysis (all classes of substitutions equally likely), assuming equal base frequencies; (2) a one-parameter analysis, using empirical (observed) base frequencies; (3) a two-parameter analysis (allowing different rates of transitions and transversions), with equal base frequencies; and (4) a two-parameter analysis, with empirically determined base frequencies.

Data were weighted as follows: 12S, COI, MORPHOLOGY, and monomorphic loci from ALLOZYMES were weighted 1,000, polymorphic loci from ALLOZYMES were weighted 500, and CALLS were scaled with a base weight of 1,000. In this way the total variation in each character was equally weighted. Each data partition was analyzed separately, and the data were pooled for a combined analysis.

Nonparametric bootstrap analyses were conducted with 5000 iterations. Decay values (Bremer support, branch support) were calculated using the Hypercard utility Autodecay 2.9.5 (Eriksson, 1996; http://www.botan.su.se/Systematik/Folk/Torsten.html); 10 random-addition sequences were used to determine the decay value for each node of each tree. The resulting trees are depicted with the outgroup arbitrarily shown as monophyletic. Bootstrap/decay values for the branch connecting the ingroup and outgroup were arbitrarily placed at the base of the ingroup. Because no data on calls were available for *Physalaemus* sp. C, the results of the COMBINED analysis were used to constrain that species to be the sister species of *Physalaemus* sp. B for comparisons of tree topologies.

TABLE 3. Summary of call statistics for the *Physalaemus pustulosus* group and close relatives. The variables are total duration of call (TLDUR, msec), frequency at onset of call (INHZ, Hz), maximum frequency (MXHZ, Hz), time to the maximum frequency (TMMX, msec), time to mid-frequency (TMHFHZ, msec), frequency at offset of call (FNHZ, Hz), dominant frequency (DOMHZ, Hz), duration of amplitude-modulated component (AMDUR, msec), rise time (RSTM, in msec), time to mid-rise (TMHFRS, msec), fall time (FLTM, msec), and time to mid-fall (TMHFFL, msec). The mean is given with the range below. The latter in parentheses following the mean is the character-state code; see Materials and Methods. The variables are discussed in more detail in Cocroft and Ryan (1995).

Species	*n*	TLDUR	INHZ	MXHZ	TMMX	TMHFHZ	FNHZ	DOMHZ	AMDUR	RSTM	TMHFRS	FLTM	TMHFFL
sp. A	1	339 (j)	812(d)	876 (a)	65 (k)	160 (j)	460 (j)	983 (v)	0 (?)	94.6 (h)	56.6 (h)	251.6 (n)	71.1 (h)
	0	234–447	800–840	800–920	43–100	150–187	400–520	767–1362	0–0	64–116	37–83	174–339	31–116
ephippifer	1	266 (g)	900 (h)	944 (e)	62 (j)	140 (i)	576 (q)	944 (t)	0 (?)	83.5 (g)	39.4 (e)	177.4 (i)	60.6 (g)
		238–308	840–1000	840–1040	43–81	112–162	520–600	845–1025	0–0	48–97	4–56	129–236	27–107
enesefae	1	747 (z)	944 (j)	976 (g)	162 (z)	386 (z)	692 (z)	962 (u)	384.8 (z)	301.5 (z)	166.6 (z)	445.7 (z)	203.7 (z)
	0	631–903	880–1040	920–1040	81–287	300–456	640–720	844–1384	238–760	230–407	125–242	372–546	99–338
pustulosus	1	370 (k)	884 (h)	884 (a)	0 (a)	124 (h)	484 (k)	712 (j)	22.3 (b)	24.0 (a)	7.9 (a)	342.8 (s)	175.0 (v)
	0	252–496	840–960	840–960	0–0	87–175	440–600	605–883	11.9–32.7	9.3–60.6	2.2–17.7	236–450	106–252
petersi	1	246 (f)	1220 (x)	1220 (w)	0 (a)	28 (b)	384 (d)	628 (g)	12.0 (a)	13.7 (a)	11.5 (a)	230.3 (m)	47.1 (e)
	0	206–350	1040–1400	1040–1400	0–0	18–50	320–480	596–693	8.4–22.3	6.0–18.8	9.6–14.2	194–331	8.2–161
freibergi	1	104 (a)	1253 (z)	1253 (z)	0 (a)	12 (a)	330 (a)	482 (a)	15.0 (a)	19.3 (a)	17.6 (b)	30.0 (a)	12.6 (a)
	0	48.2–140.8	1000–1424	1000–1424	0–0	6–25	272–368	361–585	4.5–23	14.2–29.9	13.3–24.1	34.1–124.7	1.2–37.9
coloradorum	9	221 (e)	1031 (o)	1071 (m)	25 (d)	83 (e)	556 (p)	1007 (w)	47.0 (d)	53.4 (d)	23.3 (c)	161.7 (h)	47.0 (e)
		152–358	960–1080	1000–1160	0–62	50–100	480–640	889–1133	33–72	25–72	12–52	64–285	8–128
pustulatus	1	206 (d)	964 (k)	964 (f)	0 (a)	88 (f)	676 (x)	1062 (z)	94.3 (g)	99.5 (h)	95.0 (n)	104.3 (e)	52.9 (f)
	0	186–230	880–1080	880–1080	0–0	56–118	640–800	820–1254	73.1–107.6	90.3–109.4	77.7–108.2	76.9–129.0	19.5–120
sp. B	1	395 (l)	740 (a)	888 (a)	112 (r)	115 (g)	444 (h)	894 (r)	92.1 (f)	105.1 (h)	69.4 (j)	293.7 (p)	93.3 (k)
	0	322–608	680–880	840–960	43–150	81–162	400–480	854–981	65–149	50–154	25–120	238–444	15–169

Assessments of Combinability

There are several issues related to the concept of combinability: (1) phylogenetic signal or data structure; (2) strength of support for a resulting tree topology; (3) congruence of trees from different data partitions; (4) homogeneity of data partitions; (5) compatibility of a data partition with a suboptimal tree; and (6) strength of support (assuming 5 is true) of a data partition for a suboptimal tree.

Phylogenetic signal.—If a data set has no structure that is significantly different from random, then little confidence can be placed in the resulting estimates of tree topology. However, lack of discernible structure may be an artifact of small numbers of characters. We assessed data structure using the PTP test (Faith, 1991) as implemented in PAUP* using 5000 random matrices.

Strength of support for a tree topology.—Confidence in trees was quantified for branches using character resampling (nonparametric bootstrap; Hillis and Bull, 1993) and Bremer support (decay index) value, and for the entire tree using "total support" test and the constrained tree T-PTP. Clades with >70% bootstrap values are considered strongly supported.

The "total support" test described by Källersjö et al. (1992) and recommended by Bremer (1994) consists of computing total support (the sum of all Bremer support values, also called decay indices) for the observed data and comparing this to a distribution of total support values from randomly permuted matrices. One hundred matrices were produced using MacClade 3.05, and decay indices for each matrix were calculated using Autodecay 2.9.5 (Eriksson, 1996); 10 random-addition heuristic searches were used for each decay value.

The constrained-tree T-PTP test is an extension of Faith's monophyly test (see also Faith and Cranston, 1991) in which an entire tree, rather than a single node, is used as a constraint. It is implemented as the TPTP test in PAUP*, but an entire tree is defined as a constraint rather than just one node (see Swofford et al., 1996, for a criticism of T-PTP tests). The length difference between the observed shortest tree and the shortest tree that is incongruent in any part of the tree is used as the test statistic and compared to a null distribution of length differences generated from permuted data. This test amounts to a test of the monophyly of the node with the weakest decay index. Rejection of the null hypothesis is interpreted as significant support for a specified topology, as opposed to general cladistic structure in the case of the PTP test. The null distribution is essentially one of decay indices based on permuted data. Generally, 1,000 randomized matrices were used to generate the null distribution. If the permutation-tail probability was 0.05 or less, the test was rerun with 5000 matrices to increase resolution in the tail of the distribution. The constrained-tree test differs in details of execution from the "all-groups" test proposed by Faith and Ballard (1994), although the purpose (assessing overall support of a data set for a tree) is similar.

Congruence of trees.—A third issue is the congruence of trees resulting from data partitions. We assessed tree congruence by strict consensus trees (Swofford, 1991) and tree similarity by the symmetric-difference distance, or partition metric (Robinson and Foulds, 1981), which is defined as the number of subclades that appear on either of the two trees, but not both. This metric quantifies differences in tree topology ("taxonomic congruence") irrespective of the character support. Penny and Hendy (1985) discussed several attractive features of this metric, which can be used with unrooted or rooted and binary or nonbinary trees. Values range from 0 to $2n - 6$ where n is the number of terminals (Steel and Penny, 1993). It should be noted that a terminal with differing position on two otherwise similar trees may yield a large value, in the way that a strict consensus tree would appear largely unresolved

under similar conditions. The probability that two given trees are drawn at random from all possible trees was determined using Table 3 in Hendy et al. (1984); thus, rejection of the null hypothesis indicates that two labeled topologies are more similar than one would expect by chance.

Homogeneity of partitions.—Bull et al. (1993) argued that one should be cautious in combining data partitions that are significantly heterogeneous. We do not argue for or against combining heterogeneous partitions; rather, we simply wish to determine heterogeneity before further analysis. We assessed partition homogeneity using PAUP*. The partition-homogeneity test generally assumes that if different data partitions are homogeneous, then randomly allocating characters among those partitions should yield trees that are not significantly different. As proposed by Farris et al. (1994, 1995), the test relies on the observed incongruence length difference, D_{xy}, compared to a null distribution generated by pooling the $m + n$ characters from partitions (matrices) x and y and then randomly allocating these into two matrices of original sizes m and n. The incongruence length difference, D_{xy}, is defined

$$D_{xy} = L_{(x+y)} - (L_x + L_y)$$

where L_x and L_y are the lengths of the shortest trees for matrices x and y, and $L_{(x+y)}$ is the length of the shortest tree for the combined matrix. Farris et al. (1994) argued that $L_{(x+y)}$ did not need to be calculated because it was a common term. Thus the test becomes a comparison of the sum of observed tree lengths compared to the sum of tree lengths from random character partitions. If the data partitions are congruent, then the length-sums of the random partitions will be less than or equal to that of the observed partition. If the partitions are highly incongruent, then the length-sums of the random partitions will be greater than that of the observed partition, because random partitions will tend to produce (longer) trees with more homoplasy. PAUP* determines the significance of the test by $P = 1 - (S/W)$, where S is the number of replicates in which the length-sum is greater than the length-sum for the observed partition, and W is the total number of observed and random partitions. Farris et al. (1994) noted that the exact lengths were not crucial and approximate parsimony calculations (e.g., a "one-pass" heuristic search) were sufficient, but because of the small number of taxa we used heuristic searches with TBR branch-swapping. Partition-homogeneity tests were done for all pairwise comparisons of data partitions and a simultaneous five-partition test, with 1,000 iterations for each test.

Compatibility of data partitions with suboptimal trees.—Even though two data partitions strongly support different trees, it may be that one partition is compatible (does not conflict) with the other (suboptimal) tree. Such compatibility was tested using Templeton's test and the compare-2 T-PTP.

Templeton's test (Templeton, 1983; Larson, 1994) is a Wilcoxon signed ranks test (Zar, 1974) of the difference in lengths of characters when a data partition is optimized on one tree versus another. Its results can be interpreted as a statement about the compatibility of a data partition with a suboptimal tree, rather than a statement about two tree topologies. The more conservative two-tailed test was used (Felsenstein, 1985), although it can be argued that the one-tailed test is appropriate.

The compare-2 T-PTP was suggested by Faith (1991) and is implemented in PAUP*. A data set is optimized using parsimony on each of two constraint trees, and the difference in length is used as a statistic and compared to a null distribution of length differences from randomly permuted data. If one of the constraint trees is the shortest tree, then the test reflects the compatibility of the data partition with the second, suboptimal tree.

Strength of support for suboptimal trees.—It is of interest whether a data partition gives significant support to a suboptimal topology, in addition to being compatible with it. This was assessed using a constrained-tree T-PTP as described earlier.

Other considerations.—The T-PTP permutation tests are implemented in PAUP* as a priori tests (Faith, 1991) in which no particular hypothesis of monophyly is being tested. In cases where a particular hypothesis of monophyly is tested, the a posteriori test is more appropriate. Using the a priori test can increase Type 1 error (wrongly rejecting the null hypothesis). The constrained-tree test can be performed as an a priori test because there was no expectation of particular monophyletic groups. However, it is not clear that the compare-2 tests are properly executed as a priori tests. In the case of the test for monophyly of a clade, the a posteriori monophyly test is performed by subtracting the minimum length under a monophyly constraint from the length under non-monophyly; the length differences are calculated for the observed and many permuted data matrices. However, for a particular permuted matrix the length difference is calculated using the largest value found for all groupings of taxa the same size as the clade of interest (Faith, 1991). Thus, the length difference would be evaluated, for example, for each of the 35 combinations of three taxa from the seven ingroup taxa, for each permuted matrix.

The T-PTP tests used herein (both the constrained-tree and compare-2) differ from the monophyly test in that the entire tree is constrained, and Faith's (1991) procedure of evaluating clades of equal size amounts to examining alternative trees, as is done in the a priori test. Thus, it would seem that if the entire tree is constrained, there is no operational difference between a priori and a posteriori tests. However, we feel that the issue deserves further examination (e.g., Swofford et al., 1996), and because a solution is not obvious , we have performed all permutation tests as a priori tests. One of the purposes of this paper is to examine the behavior of these tests, and the results of these tests are very consistent with other tests (see Results).

We have used the COMBINED data set as if it were any other data partition. However, this introduces a degree of nonindependence in pairwise comparisons. Curiosity about the behavior of the COMBINED partition in these tests outweighs our concerns about nonindependence, and the results can be readily interpreted.

A sequential Bonferroni correction (Rice, 1989) was applied to the tables of probability values resulting from the pairwise procedures.

RESULTS

The statistics for the call variables and the coding for each are shown in Table 3. The allele frequencies for the presumptive loci are presented in Table 4.

Phylogenetic Analysis

Phylogenetic signal and phylogeny estimation.—The PTP test indicated that each data partition had significant phylogenetic structure (Table 5). Statistics from the results of the separate and combined phylogenetic analyses are shown in Table 5 and Figure 1. Either one or two most parsimonious trees were found for each partition. The COMBINED data set and the 12S partition produced the same tree.

Weighting transversions twice as much as transitions yielded the same shortest trees for the COMBINED, 12S, and COI partitions. Weighting transversions five times as much as transitions yielded the same shortest trees for the COMBINED and 12S partitions, and for the COI partition yielded one of the two trees found in the unweighted analysis, the one with the ((*P. coloradorum*, *pustulatus*), (sp. B, sp. C)) topology.

For the 12S data partition, all maximum-likelihood analyses yielded

TABLE 4. Allozyme genotypes observed in 10 species of *Physalaemus*. See Table 1 for explanation of abbreviations of loci. Genotypes are followed by the number of individuals observed with the respective genotype. If no genotype is shown, then none of the specimens exhibited interpretable activity (these loci were scored as missing in the phylogenetic analysis).

	Species									
Locus	*coloradorum*	*enesefae*	*ephippifer*	*freibergi*	*petersi*	*pustulatus*	*pustulosus*	sp. A	sp. B	sp. C
Aco-1	cc:10	ee:9	dd:8	dd:8	dd:10	cc:8 cd:1	ab:2 bb:8	dd:8 de:2	cc:10	cc:4
Aco-2	dd:8	bb:1 bf:2 ff:3	aa:2 ab:2 bb:4	cc:7	cc:10	bd:3 dd:6	bb:9	bb:10	dd:6 ee:1	bd:4
Ak	a:6 aa:2 cc:1	cc:10	cc:7	cc:8	cc:9	aa:1 ac:3 cc:1	cc:10	cc:7	cc:8	aa:4
Ast-M	bb:10	cc:10	cc:8	bb:9	cc:10	bb:9	dd:10	ee:10	aa:9 bb:1	bb:4
Aat-S	bb:10	dd:10	bb:8	cc:9	cc:10	bb:9	bb:8 bc:2	bc:3 cc:3	aa:10	bb:4
Ck	cc:10	bb:10	aa:8	aa:9	aa:10	bb:5	bb:10	aa:10	bb:10	bb:4
Cap	aa:10	bb:6	bb:8	aa:9	bb:10	bb:9	bb:10	bb:10	cc:8	aa:4
Est-D	bb:10	bb:10	bb:8	bb:9	bb:10	ab:1 bb:8	bb:10	bb:10	bb:10	bb:4
Fbp	ee:8	dd:10	bb:8	dd:9	dd:10	ff:9	cc:10	bb:9	bb:10	bb:4
G6pdh	aa:9	bb:10	bb:8	aa:9	aa:5	aa:9	aa:10	bb:10	aa:10	aa:4
Gpi	aa:8 ac:2	cc:10	dd:6 df:2	ii:9	ee:10	ac:4 cc:5	gg:10	hh:10	cc:10	jj:4
Gtdh	aa:10	bb:10	bb:8	aa:9	aa:10	aa:9	aa:10	bb:10	aa:10	aa:4
Gr	aa:8	dd:10	dd:7	dd:9	dd:10	cc:8	bb:3 bf:5 ff:2	dd:10	dd:10	dd:3
G3pdh	bb:10	bb:9	bb:8	bb:9	bb:10	aa:9	bb:10	bb:10	bb:10	bb:4
Idh-1	dd:10	dd:10	ee:10	dd:9	aa:4 ad:6	ff:9	bb:10	dd:10	dd:10	dd:4
Idh-2	cc:10	aa:10	ab:1 bb:7	dd:9	dd:10	dd:8	bd:4 dd:6	bb:10	ee:10	ce:1 ee:3
Ldh-A	bb:10	bb:10	aa:8	cc:9	cc:9 cd:1	bb:9	cc:10	bb:10	bb:10	bb:4
Ldh-B	aa:7 ae:1 ee:2	gg:9	—	dd:9	dd:10	ff:9	bb:10	—	cc:10	hh:4
Mdh-1	bb:10	bb:10	cc:8	dd:9	dd:10	bb:9	aa:9	ee:10	ab:1 bb:9	ff:4

TABLE 4. Continued

Locus	Species									
	coloradorum	*enesefae*	*ephippifer*	*freibergi*	*petersi*	*pustulatus*	*pustulosus*	sp. A	sp. B	sp. C
Mdh-2	aa:10	aa:10	—	dd:9	dd:10	aa:3 ad:6	aa:10	—	aa:10	—
Mdhp-1	aa:10	aa:10	ag:1 bg:2 gg:5	bb:4 bc:4 cc:1	bb:8 bc:2	ee:9	bb:10	bb:10	cc:9	ff:4
Mdph-2	aa:4 ab:3 bb:3	ee:10	ee:8	dd:9	dd:10	dd:8	aa:6 ab:1 bb:1 ad:1 dd:1	ab:1 bb:8	aa:5 ab:3 bb:1	bb:4
Pep-A	dd:10	cc:9	ee:7	bb:8	cc:10	dd:9	cc:10	aa:10	cc:10	cc:4
Pgm	aa:7 ab:3	gg:10	cc:8	hh:9	ee:10	bb:1 bc:4 cc:4	ff:9 fi:1	gg:10	cc:1 cf:2 ff:7	jj:4
Pgdh	cc:10	aa:2 ab:4 bb:4	ab:2 bb:4 bf:2	dd:9	de:1 ee:7	aa:8 ac:1	eg:3 gg:6	aa:1 ab:4 bb:4	ee:10	hh:4
Sod-S	aa:10	dd:9	dd:8	ff:1 fg:4 gg:4	ee:2 eg:3 gg:1 gh:2 hh:1	bb:5 bi:2 ii:1	cc:10	dd:10	bb:10	bb:4
Tpi	aa:10	dd:10	cc:10	gg:9	gg:9 gh:1	bb:9	ee:3 eg:6 gg:1	cc:10	dd:9 df:1	ii:4

TABLE 5. Phylogeny estimation statistics for each data partition. CI = consistency index, RI = retention index, t = total support, ti = total support index, and mpt = number of most parsimonious trees. The constrained-tree T-PTP is the probability that the data support the constraint ree. The PTP is the probability associated with the test for significant phylogenetic structure.

Data partition	Total characters	Informative characters	CI	RI	Length	t	ti	Constrained-tree T-PTP	PTP	mpt
COMBINED	1808	442	0.68	0.60	1273.94	160.98	0.126	0.0002	0.0002	1
12S	1214	255	0.73	0.66	709	107	0.151	0.0002	0.0002	1
COI	543	138	0.60	0.45	425	26	0.061	0.0002	0.0002	2
ALLOZYMES	27	25	0.80	0.53	102	9.5	0.093	0.0002	0.0002	1
CALLS	12	12	0.71	0.61	16.8	2.32	0.138	0.0002	0.0004	2
MORPHOLOGY	12	12	1.00	1.00	113	13	1.000	0.0002	0.0002	1

the same trees as did the unweighted parsimony analysis (Fig. 1). For the COI partition, only one of the two best parsimony trees having the same topology as the tree from the weighted parsimony analysis was found. Under both one- and two-parameter models, the 12S/COMBINED topology (Fig. 1) had a higher likelihood using empirical base frequencies than did the alternate COI tree. When equal base frequencies were assumed, the COI tree had a higher likelihood than the 12S/COMBINED tree. Because the results of the maximum-likelihood analyses do not differ significantly from those of the parsimony analysis, they are not discussed further.

In all trees except CALLS, the ingroup was found to be monophyletic. Within the ingroup, the cis-Andean species (*P. pustulosus*, *petersi*, and *freibergi*) formed a clade in the MORPHOLOGY, 12S, COMBINED, and ALLOZYMES trees. The trans-Andean species (*P. coloradorum*, *pustulatus*, sp. B, and sp. C) formed a clade in the COI, MORPHOLOGY, 12S, and COMBINED tree. Neither of these geographic groups was monophyletic in the CALLS tree. In all trees *P. petersi* and *P. freibergi* were sister taxa.

Strength of support for a tree topology.—The COMBINED tree has the strongest support; only one bootstrap value (63) was below 90. Bootstrap values for the ALLOZYMES and CALLS trees were the lowest. The statistical significance of the decay index values (Fig. 1) is undetermined, but they are strongly correlated with the bootstrap values (Spearman's rho = 0.879, $P = 0.0001$). The total support test values for each data partition were significant (Fig. 2), indicating departure from random matrices. However, the behavior of this test has not been explored. The null distribution from permuted matrices is highly asymmetric, with most values being 0. A total support value of 0 means that no branch in the tree calculated from a randomized matrix had a decay index greater than 0.

The constrained-tree T-PTP tests (Table 5) indicate that each data partition significantly supports the tree derived from that partition.

Congruence of trees.—A strict consensus tree of the five topologies is unresolved except for the *P. petersi–freibergi* clade (these species were considered conspecific by Cannatella and Duellman [1984]). In the CALLS tree, the ingroup is not monophyletic. If the CALLS tree is excluded from the consensus analysis, the only additional resolved node is the ingroup.

The significance test of the symmetric-difference metric (Table 6) indicated that the CALLS tree is not similar to any other tree beyond random expectation, as is the similarity of the COI–ALLOZYMES pair. Any other pair of trees is too similar to have been drawn at random.

Partition homogeneity.—The null hypothesis that the five data partitions were homogeneous was not rejected

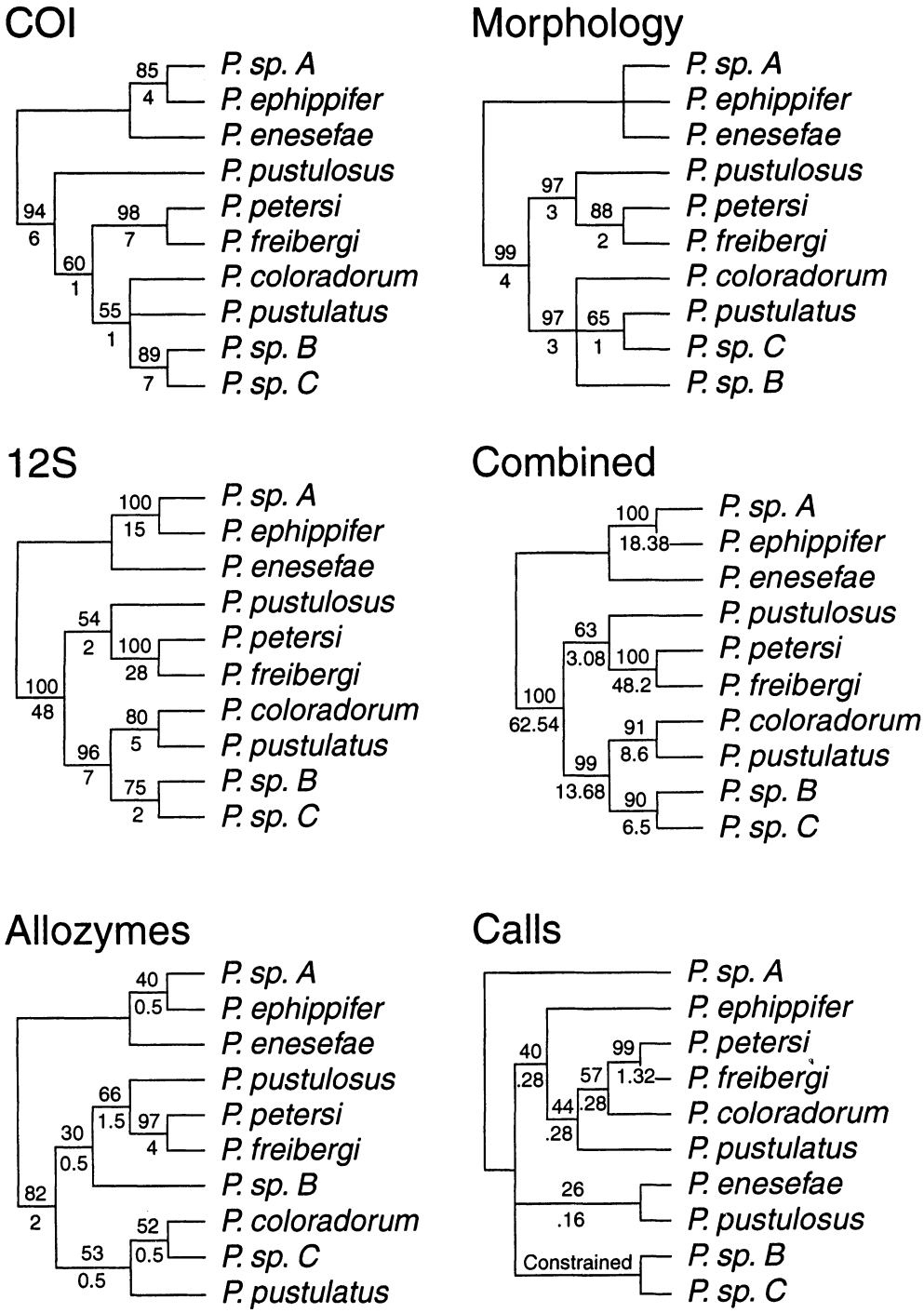

FIGURE 1. Phylogenies of the *P. pustulosus* group, based on individual data partitions and the COMBINED partition (see Table 5). Bootstrap values are given above the branch and decay values below.

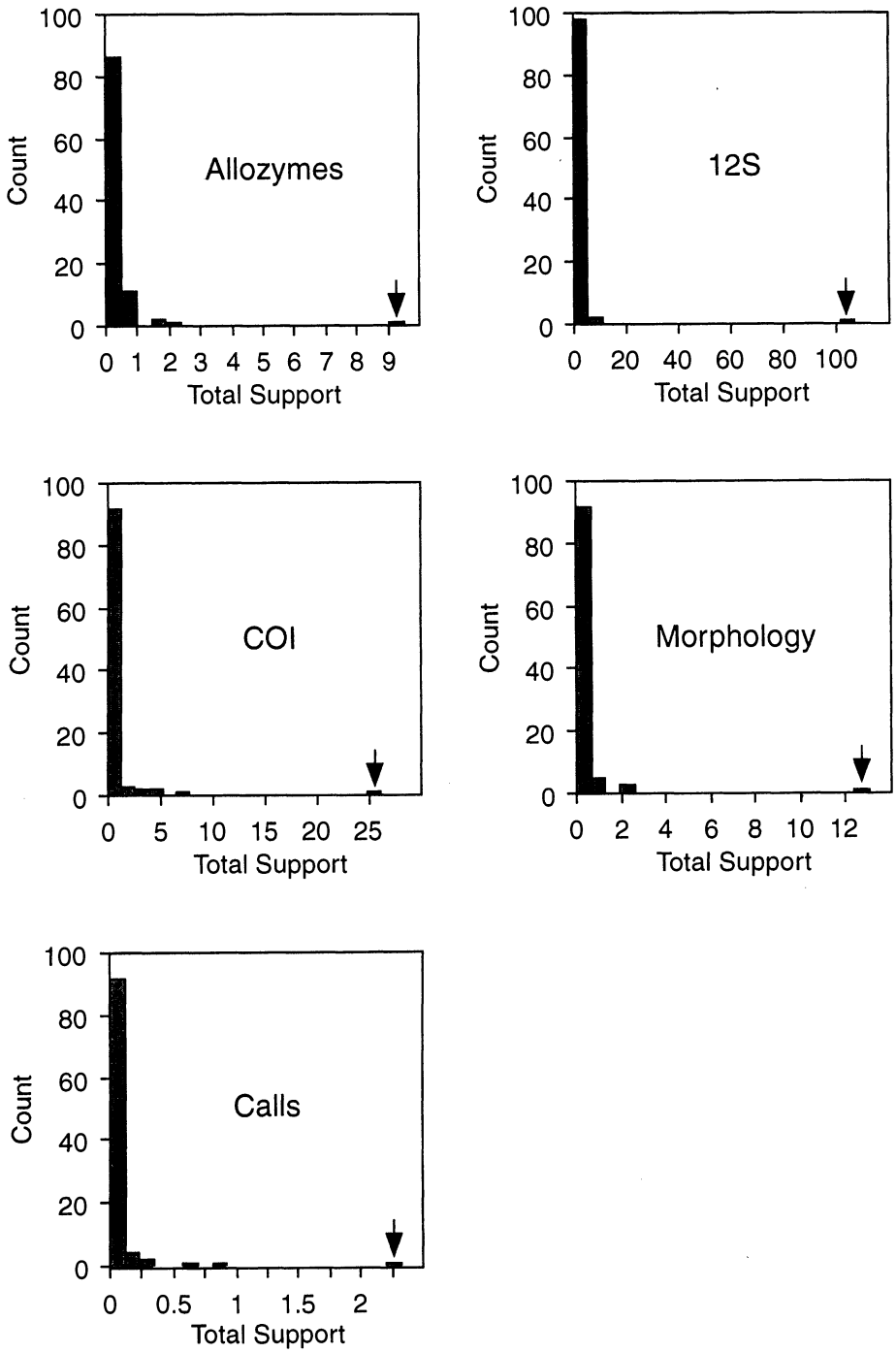

FIGURE 2. Frequency distributions of total support values from 100 randomized matrices. Arrows indicate observed total support values, which lie significantly outside of the distribution of values from random matrices.

TABLE 6. Probabilities (and associated symmetric-difference distances in parentheses) that a pair of trees with 10 terminals are no more similar than a pair of trees drawn from a random distribution of nonbinary trees (Hendy et al., 1984). The Bonferroni-corrected critical value for a table-wide alpha of 0.05 was 0.010. Asterisk indicates significant value.

Topology	Combined/12S	COI	Allozymes	Calls
COI	<0.0001* (3)			
Allozymes	0.0047* (6)	0.0180 (7)		
Calls	0.127 (9)	0.0548 (8)	0.259 (11)	
Morphology	0.0002* (4)	0.0010* (5)	0.0047* (6)	0.127 (9)

($P = 0.389$). Results from pairwise tests (Table 7) indicate that the null hypothesis was not rejected except for the CALLS–MORPHOLOGY comparison. These two partitions have the fewest characters.

TABLE 7. Probability values from pairwise partition-homogeneity tests (1,000 random partitions) for all data partitions. The Bonferroni-corrected critical vlaue for a table-wide alpha of 0.05 was 0.005. A significant value (asterisk) indicates heterogeneity between paired data partitions.

	12S	COI	Allozymes	Calls
COI	0.724			
Allozymes	0.570	0.749		
Calls	0.293	0.440	0.502	
Morphology	0.719	0.202	0.452	0.002*

Compatibility of data with suboptimal trees.—Templeton tests (Table 8) indicate that all data partitions are incompatible with the CALLS tree. Additionally, the two largest data partitions, 12S and COMBINED, are incompatible with the ALLOZYMES trees. All other data partitions are compatible with the remaining suboptimal trees.

Interestingly, the same incompatibilities were obtained from the compare-2 tests (Table 9). In addition, the four smallest nonsignificant probabilities in Table 8 were found to be significant by the compare-2 test (CALLS–COI, COI–ALLOZYMES, COMBINED–MORPHOLOGY, and 12S–MORPHOLOGY). By this test, all data

TABLE 8. Results from Templeton tests, under the null hypothesis that a data partition is equally compatible with a suboptimal tree. The Bonferroni-corrected critical value for a table-wide alpha of 0.05 was 0.0029. In each cell the sample size and Wilcoxon's T are separated by a comma on the first line, and the probability (one-tailed test) is given below. For $n < 100$, the probability was taken from Table D.18 in Zar (1974); interpolation was performed as needed; for $n \geq 100$ the normal approximation was used. Asterisk indicates significant value.

	Alternative tree				
Partition	Comb/12S	COI[a]	Allozymes	Calls[a]	Morphology[a]
Combined	—	74, 1336.5 >0.25	118, 1913 <0.0001*	245, 3047.5 <0.0001*	87, 1291.5 0.0042
12S	—	38, 351 >0.25	63, 480 <0.0001*	149, 682.5 <0.0001*	47, 312 0.0038
COI[a]	24, 125 0.25	—	63, 713.5 >0.01	52, 220 <0.0001*	56, 644 >0.10
Allozymes	7, 9.5 >0.25	10, 17 >0.10	—	15, 0 <0.0001[b]*	5, 2.5 >0.10
Calls[a]	11, 22 >0.10	12, 8 >0.05	11, 25 >0.25	—	10, 18.5 >0.10
Morphology[a]	1, 0 0.5	4, 0 0.10	4, 0 0.10	10, 0 0.00098[b]*	—

[a] In cases where multiple equally parsimonious trees were compared, the largest probability value (least likely to reject) is reported. However, in each case all values either uniformly reject or fail to reject the null hypothesis.

[b] Because sufficiently accurate table values were not available, the sign test was performed.

TABLE 9. Results from compare-2 permutation tests, under the null hypothesis that a data partition is equally compatible with an alternative, suboptimal tree. The Bonferroni-corrected critical value at which a table-wide alpha of 0.05 was obtained was 0.0038; 1,000 or 5,000 replicates were used, as described in the text. Asterisk indicates significant value.

	Alternative tree				
Partition	Comb/12S	COI	Allozymes	Calls	Morphology
Combined	—	0.210	0.0002*	0.0002*	0.0002*
12S	—	0.246	0.0002*	0.0002*	0.0008*
COI	0.201	—	0.0030*	0.0002*	0.010
Allozymes	0.206	0.070	—	0.0002*	0.0366
Calls	0.014	0.0002*	0.093	—	0.021
Morphology	0.599	0.045	0.101	0.0002*	—

partitions are extremely incompatible with the CALLS tree.

Strength of support for suboptimal trees.— The results of the constrained-tree T-PTP (Table 10) were consistent with those of the compare-2 tests (Table 9). That is, in all cases (11) in which the compare-2 tests indicated significant incompatibility, the constrained-tree test showed no significant support for the suboptimal tree. Conversely, in all cases in which the constrained-tree test indicated significant data support for an alternative tree, the compare-2 results showed compatibility with the suboptimal tree.

Certain data partitions provided support for suboptimal trees (Table 10). Among the larger data partitions, COMBINED and 12S provide significant signal for the COI tree, and vice-versa. The COMBINED tree is strongly supported by COI, ALLOZYMES, and MORPHOLOGY, but not CALLS (which supports no suboptimal tree).

DISCUSSION

Incongruence

Overall, the tests indicate that each data partition is significantly (nonrandomly) structured (PTP tests), and each strongly supports its own shortest tree (constrained-tree T-PTP, total support test). Do the phylogenies derived from these partitions disagree? This depends on what one means by disagreement. It has been argued (Barrett et al., 1991) that strict consensus trees are conservative and mask estimates of relationship, and our results support this claim; the strict consensus tree is unresolved except for the *P. petersi–freibergi* clade. In contrast, the symmetric-difference test shows that most of the pairwise combinations of topologies are too similar to

TABLE 10. Results from constrained-tree permutation tests, under the null hypothesis that a data partition provides no significant support for a suboptimal tree. The Bonferroni-corrected critical value at which a table-wide alpha of 0.05 was obtained was 0.0025; 1,000 or 5,000 replicates were used, as described in the text. Asterisk indicates significant value.

	Alternative tree				
Partition	Comb/12S	COI	Allozymes	Calls	Morphology
Combined	—	0.0004*	0.555	1.000	0.195
12S	—	0.0002*	0.333	1.000	0.187
COI	0.0004*	—	0.153	0.914	0.046
Allozymes	0.0004*	0.0048	—	0.945	0.0034
Calls	0.047	0.441	0.016	—	0.079
Morphology	0.0012*	0.072	0.042	1.000	—

have been chosen at random (except for all pairings of CALLS with other trees, and ALLOZYMES–COI). This is suggestive of underlying signal in common to all data partitions except for CALLS.

The simultaneous and pairwise partition-homogeneity tests are interpreted as indicating that the partitions are mostly combinable, with the exception of the CALLS–MORPHOLOGY pair. It is perhaps no coincidence that the CALLS partition is not combinable with the most internally congruent data partition. These results considered together indicate that the data partitions are each well structured, and generally agree in their estimates of relationships.

Examination of the compatibility of a data partition with a suboptimal tree gives perhaps a more accurate as well as more complex picture of the relations of data partitions. The CALLS tree has little similarity to other trees. All other data partitions provide no significant support for the CALLS tree, and indeed, all are incompatible with it. Nonetheless, the CALLS data partition is compatible with most of the other trees (except for the COI tree in the compare-2 test), even though its symmetric-difference distance to any other tree is large. Additionally, the 12S (and COMBINED) partition is incompatible with the ALLOZYMES tree and incompatible (compare-2 test) or marginally compatible (Templeton test) with the MORPHOLOGY tree, but the ALLOZYMES and MORPHOLOGY partitions, both with few characters, are compatible with the 12S/COMBINED tree under both tests. We suggest that this "combinability" is due to the small size of the partitions. That is, a small, well-structured partition might be expected to be compatible with the tree derived from a large partition, but the large partition is incompatible with the tree derived from the small partition. If the partitions are combined, the small one is effectively swamped out by the larger one.

This possible effect of small partitions was examined using Fisher's exact test, in which small (ALLOZYMES, MORPHOLOGY, CALLS) versus large (12S, COI) partitions were scored as being compatible or incompatible with a suboptimal tree according to Templeton's test. The null hypothesis of no association between partition size and data compatibility was marginally rejected at $P = 0.046$. However, when applied to the results of the compare-2 tests, the null hypothesis was not rejected ($P = 0.168$). A comparable examination of other data sets might be enlightening.

Our principal goal has been to identify and localize incongruence in these data partitions, rather than to argue for or against combining data. Nonetheless, it is clear that the tree from COMBINED data set is the best supported of the trees. If one assumes that a combined analysis yields the best estimate of the phylogeny, it becomes particularly interesting that omitting the 12S partition (the largest) from the combined analysis still yields the COMBINED tree. This result is similar to that observed by Olmstead and Sweere (1994). Additionally, it may be an example of consistency (Huelsenbeck, 1995), in which the accumulation of sufficient data (even in the absence of the 12S partition) leads the analysis to converge on the "correct" phylogeny.

Relationships and Call Evolution

The *Physalaemus pustulosus* species group was the first example used to argue for the role of sensory exploitation in sexual selection (Ryan et al., 1990b). This hypothesis states simply that males evolve traits to exploit preexisting female preferences. The data that test this hypothesis come from examining sexually selected male traits and preferences for those traits in taxa with and without the traits. This behavioral information, together with an estimate of phylogenetic relationships, is then used to determine the most parsimonious interpretation of patterns of trait and preference evolution. The sensory exploitation hypothesis predicts that the preference existed prior to the trait, while other hypotheses such as

runaway sexual selection and selection for good genes predict coevolution of trait and preference (Ryan, 1990; Kirkpatrick and Ryan, 1991).

In *P. pustulosus*, females prefer calls with chucks added to the whine, and they also prefer lower frequency chucks to higher frequency chucks (Ryan, 1980; however, the strength of the frequency preference is weaker than previously suggested [Wilczynski et al., 1995]). *Physalaemus coloradorum* males (and all other *Physalaemus* except *P. freibergi*) do not produce chucks, but females prefer the conspecific call to which chucks have been artificially added over their unaltered conspecific calls (Ryan and Rand, 1993). Also, *P. coloradorum* females have the same neural tuning, which in *P. pustulosus* is thought to guide females toward lower frequency chucks (Ryan et al., 1990b). Given the phylogeny presented herein, the most parsimonious hypothesis is that the preference for the chuck and the neural bias toward lower frequency chucks existed prior to the evolution of the chuck (Fig. 3a). This is true whether the chuck evolved twice independently in the *pustulosus-petersi-freibergi* clade, or once in the common ancestor of that clade with subsequent loss in *P. petersi* (see also Ryan, 1996).

The initial phylogenetic hypothesis for relationships within the *P. pustulosus* species group, which provided the phylogenetic framework for testing the sensory exploitation hypothesis (Ryan et al., 1990b), was suggested by Cannatella and Duellman (1984). This is the same hypothesis supported here, although we now recognize additional species. Subsequent to these earlier studies, we realized the necessity of verifying the phylogenetic hypothesis of Cannatella and Duellman (1984), given the critical nature of this hypothesis in evaluating the sensory exploitation hypothesis. When subsequent data for sensory exploitation were presented, however, our preliminary molecular analysis (based on a subset of the allozyme data and about 400 bp of the 12S gene) suggested a tree matching the COI topology (Fig. 3a), in which *P. pustulosus* was the sister species to all other species in the ingroup (Ryan and Rand, 1993). This tree produced an unexpected biogeographic pattern in which *P. petersi* was more closely related to species on the other side of the Andes than to its neighbor *P. pustulosus*.

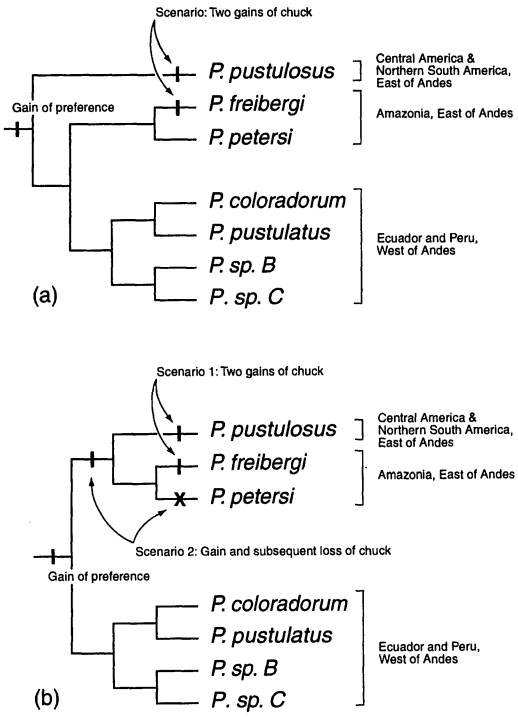

FIGURE 3. Scenarios for evolution of the chuck component of the call mapped onto alternative trees. Generalized geographic distributions of taxa are presented. (a) Tree supported by a preliminary analysis (Ryan, 1996). (b) Tree favored by present analysis.

Pomiankowski (1994) suggested that this preliminary phylogeny complicated support for the sensory exploitation hypothesis. However, he did not comment upon additional examples of sensory exploitation in the group that were not "complicated" by the pectinate and preliminary phylogeny (e.g., female *P. pustulosus* prefer their own calls with the amplitude-modulated prefix of *P. pustulatus*). The present phylogenetic analysis yields the same topology that

was originally, and clearly, used to argue for sensory exploitation as an important force in sexual selection in this species group.

Although the present analysis (see also Ryan and Rand, 1995; Ryan, 1996) has returned to the scheme of relationships (Fig. 3b) in which *P. pustulosus* and *P. petersi* (and *P. freibergi*) form a clade, the evolutionary scenario is more ambiguous. One most parsimonious interpretation is that the chuck evolved twice, but an equally parsimonious one is that the chuck evolved once and was lost in *Physalaemus petersi*. This latter interpretation conflicts with results reported from the preliminary data set (Fig. 3a). The conflict is exemplified by the trees derived from the 12S partition and the COI partition, and in each it is the relationship of the *P. petersi* + *freibergi* cluster that differs. One can also view this conflict as a rooting issue; if one excludes the outgroups, the unrooted 12S and COI trees (corresponding to Figs. 3a and 3b) are the same. Relationships among the outgroups become important, and we are expanding the sample of outgroup taxa.

Behavioral Characters in Phylogeny Estimation

Differences of opinion exist about whether behavioral characters might be expected to be reliable in phylogenetic analysis (Gittleman et al., 1996; Martins, 1996; Ryan, 1996). De Queiroz and Wimberger (1993) and Wimberger and de Queiroz (1996) have argued that there is no reason to expect that behavioral characters should in general be poor indicators of phylogenetic relationships. On the other hand, certain classes of behavioral characters, such as mate-recognition signals, may evolve rapidly (Ryan et al., 1990a). Rapid evolution might increase homoplasy, obscure the "true" phylogenetic signal and even suggest a misleading signal. Thus, one might hypothesize that rapidly evolving characters involved in behavioral display are less reliable in phylogeny estimation (but see Foster et al., 1996). For example, in male crickets, the call is often the first phenotype to diverge among lineages (Shaw, 1996a), and in the cricket genus *Laupala* there is a lack of congruence between the mtDNA haplotype phylogeny and taxonomic species as defined by song type (Shaw, 1996b). Likewise, Ryan et al. (1996) showed for 30 populations of *Physalaemus pustulosus* along a 5,000-km transect that call similarity and genetic (allozyme) similarity covary only slightly significantly after the effects of geographic proximity are controlled; also, call similarity and geographic proximity are strongly correlated when controlling for allozyme similarity.

Although the evolutionary lability of the call characters is a possible explanation for the incongruence of CALLS, there are two other explanations. One is the small number of characters, which suggests that the apparent incongruence is due to sampling error. MORPHOLOGY is also small, but is internally consistent and also compatible with most other partitions. Perhaps the relevant parameter is not the number of characters but the number of informative character states. The CALLS partition has a larger number of such character states than does MORPHOLOGY because of the way the continuous data were made discrete. There is some indication that coding procedures that maximize the number of informative characters increase the measure of phyogenetic signal in a data set (Wiens, 1995). A more general consideration of these issues using multiple data sets is desirable.

In the *P. pustulosus* group, the incongruence exhibited between the CALLS data partition and all others, and the general congruence among the other partitions, suggest that the call characters, if considered alone, mislead the phylogenetic analysis. The only set of relationships with which the CALLS partition agrees with all other data partitions is the *P. petersi–freibergi* clade, a pair of cryptic species that was considered one species based on external morphology

(Cannatella and Duellman, 1984). We argue that these limited data indicate that the homologous similarity in calls of recently separated species is quickly lost as the species diverge. However, PTP tests suggest that the call characters possess significant phylogenetic signal; this might result from correlations among the characters that produce structure in the data even though that structure does not reflect phylogeny. This observation, coupled with the preceding conclusions, is consistent with observation of strong selection on the call signal in *Physalaemus* (Ryan, 1985). It may be that sexually selected character complexes associated with evolving signal-receiver systems will be generally unsuitable for use in phylogeny estimation. However, additional studies are needed to determine the generality of this conclusion.

ACKNOWLEDGMENTS

We thank Jim McGuire, Steve Poe, Mary McKitrick, Allan Larson, and especially Alan de Queiroz for comments on the manuscript. The 12S and 16S sequence data were collected by Marty Badgett. David Swofford allowed us to use PAUP*. Specimens were lent by the following curators: John Cadle, William E. Duellman, David Good, and Charles W. Myers. We also thank the numerous people who aided in the collection of tissue samples and logistical aspects of the field work; these persons have been acknowledged in previous papers.

REFERENCES

BARRETT, M., M. J. DONOGHUE, AND E. SOBER. 1991. Against consensus. Syst. Biol. 40:486–493.

BREMER, K. 1994. Branch support and tree stability. Cladistics 10:295–304.

BULL, J. J., J. P. HUELSENBECK, C. W. CUNNINGHAM, D. L. SWOFFORD, AND P. J. WADDELL. 1993. Partitioning and combining data in phylogenetic analysis. Syst. Biol. 42:384–397.

CANNATELLA, D. C., AND W. E. DUELLMAN. 1984. Leptodactylid frogs of the *Physalaemus pustulosus* group. Copeia 1984:902–921.

CHIPPINDALE, P. T., AND J. J. WIENS. 1994. Weighting, partitioning, and combining characters in phylogenetic analysis. Syst. Biol. 43:278–87.

COCROFT, R. B., AND M. J. RYAN. 1995. Patterns of advertisement call evolution in toads and chorus frogs. Anim. Behav. 49:283–303.

DE QUEIROZ, A., M. J. DONOGHUE, AND J. KIM. 1996. Separate versus combined analysis of phylogenetic evidence. Annu. Rev. Ecol. Syst. 26:657–681.

DE QUEIROZ, A., AND P. H. WIMBERGER. 1993. The usefulness of behavior for phylogeny estimation: Levels of homoplasy in behavioral and morphological characters. Evolution 47:46–60.

DINGERKUS, G., AND L. D. UHLER. 1977. Enzyme clearing of alcian blue stained whole small vertebrates for demonstration of cartilage. Stain Tech. 52:229–232.

EERNISSE, D. J., AND A. G. KLUGE. 1993. Taxonomic congruence versus total evidence, and amniote phylogeny inferred from fossils, molecules, and morphology. Mol. Biol. Evol. 10:1170–1195.

ERIKSSON, T. 1996. AutoDecay, version 2.9.5. Botaniska Institutionen, Stockholm University, Stockholm.

FAITH, D. P. 1991. Cladistic permutation tests for monophyly and nonmonophyly. Syst. Zool. 40:366–375.

FAITH, D. P., AND J. W. O. BALLARD. 1994. Length differences and topology-dependent tests: a response to Källersjö et al. Cladistics 10:57–64.

FAITH, D. P., AND P. S. CRANSTON. 1991. Could a cladogram this short have arisen by chance alone?: On permutation tests for cladistic structure. Cladistics 7:1–28.

FARRIS, J. S., M. KÄLLERSJÖ, A. G. KLUGE, AND C. BULT. 1994. Testing significance of incongruence. Cladistics 10:315–319.

FARRIS, J. S., M. KÄLLERSJÖ, A. G. KLUGE, AND C. BULT. 1995. Constructing a significance test for incongruence. Syst. Biol. 44:570–572.

FELSENSTEIN, J. 1985. Confidence limits on phylogenies with a molecular clock. Syst. Zool. 34:152–161.

FOSTER, S. A., W. A. CRESKO, K. P. JOHNSON, M. U. TLUSTY, AND H. E. WILLMOTT. 1996. Patterns of homoplasy in behavioral evolution. Pages 245–269 *in* Homoplasy: The recurrence of similarity in evolution (M. J. Sanderson and L. Hufford, eds.). Academic Press, San Diego.

GITTLEMAN, J. L., C. G. ANDERSON, M. KOT, AND H.-K. LUH. 1996. Phylogenetic lability and rates of evolution: a comparison of behavioral, morphological, and life history traits. Pages 166–205 *in* Phylogenies and the comparative method in animal behavior (E. P. Martins, ed.). Oxford Univ. Press, New York.

HENDY, M. D., C. H. C. LITTLE, AND D. PENNY. 1984. Comparing trees with pendant vertices labelled. SIAM J. Appl. Math. 44:1054–1065.

HILLIS, D. M. 1991. Discriminating between phylogenetic signal and random noise in DNA sequences. Pages 278-294 *in* Phylogenetic analysis of DNA sequences (M. M. Miyamoto and J. Cracraft, eds.). Oxford Univ. Press, Oxford, New York.

HILLIS, D. M., AND J. J. BULL. 1993. An empirical test of bootstrapping as a method for assessing confidence in phylogenetic analysis. Syst. Biol. 42:182–192.

HILLIS, D. M., B. K. MABLE, A. LARSON, S. K. DAVIS, AND E. A. ZIMMER. 1996. Nucleic acids IV:

Sequencing and cloning. Pages 321–381 *in* Molecular systematics, 2nd edition (D. M. Hillis, C. Moritz, and B. K. Mable, eds.). Sinauer Associates, Sunderland, Massachusetts.

HUELSENBECK, J. P. 1991. Tree-length distribution skewness: An indicator of phylogenetic information. Syst. Zool. 40:257-270.

HUELSENBECK, J. P. 1995. Performance of phylogenetic methods in simulation. Syst. Biol. 44:17–48.

HUELSENBECK, J. P., AND J. J. BULL. 1996. A likelihood ratio test to detect conflicting phylogenetic signal. Syst. Biol. 45:92–98.

INTERNATIONAL UNION OF BIOCHEMISTRY, NOMENCLATURE. COMMITTEE. 1984. Enzyme nomenclature. Academic Press, Orlando, Florida.

IRWIN, R. E. 1996. The phylogenetic content of avian courtship display and song evolution. Pages 234–252 *in* Phylogenies and the comparative method in animal behavior (E. P. Martins, ed.). Oxford Univ. Press, New York.

KÄLLERSJÖ, M., J. S. FARRIS, A. G. KLUGE, AND C. BULT. 1992. Skewness and permutation. Cladistics 8:275–287.

KENNEDY, M., H. G. SPENCER, AND R. D. GRAY. 1996. Hop, step, and gape: Do the social displays of the Pelecaniformes reflect phylogeny? Anim. Behav. 51:273–291.

KIRKPATRICK, M., AND M. J. RYAN. 1991. The paradox of the lek and the evolution of mating preferences. Nature 350:33–38.

LARSON, A. 1994. The comparison of morphological and molecular data in phylogenetic systematics. Pages 371–390 *in* Molecular ecology and evolution: Approaches and applications (B. Schierwater, B. Streit, G. P. Wagner and R. DeSalle, eds.). Birkhäuser Verlag, Basel.

LUTZONI, F. 1997. Phylogeny of lichen- and nonlichen-forming omphalinoid mushrooms and the utility of testing for combinability among multiple data sets. Syst. Biol. 46:373–406.

MADDISON, W. P., AND D. R. MADDISON. 1992. MacClade, version 3. Sinauer Associates, Sunderland, Massachusetts.

MADDISON, W., AND M. SLATKIN. 1990. Parsimony reconstructions of ancestral states do not depend on the relative distances between linearly-ordered character states. Syst. Zool. 39:175–178.

MADDISON, D. R., D. L. SWOFFORD, AND W. P. MADDISON. 1997. NEXUS: An extensible file format for systematic information. Syst. Biol. 46:590–621.

MARTINS, E. P. (ed.). 1996. Phylogenies and the comparative method in animal behavior. Oxford Univ. Press, New York.

MASON-GAMER, R. J., AND E. A. KELLOGG. 1996. Testing for phylogenetic conflict among molecular data sets in the tribe Triticeae (Gramineae). Syst. Biol. 45:522–543.

MURPHY, R. M., J. W. SITES, JR., D. G. BUTH, AND C. H. HAUFLER. 1996. Proteins: Isozyme electrophoresis. Pages 51–120 *in* Molecular systematics, 2nd edition (D. M. Hillis, C. Moritz, and B. K. Mable, eds.). Sinauer Associates, Sunderland, Massachusetts.

OLMSTEAD, R. G., AND J. A. SWEERE. 1994. Combining data in phylogenetic systematics: An empirical approach using three molecular data sets in the Solanaceae. Syst. Biol. 43:467–481.

PALUMBI, S. R. 1996. Nucleic acids II: The polymerase chain reaction. Pages 205–247 *in* Molecular systematics, 2nd edition (D. M. Hillis, C. Moritz, and B. K. Mable, eds.). Sinauer Associates, Sunderland, Massachusetts.

PENNY, D., AND M. D. HENDY. 1985. The use of tree comparison metrics. Syst. Zool. 34:75–82.

POE, S. A. 1996. Data set incongruence and the phylogeny of crocodilians. Syst. Biol. 45:393–414.

POMIANKOWSKI, A. 1994. Swordplay and sensory bias. Nature 368:494–495.

RAND, A. S., M. J. RYAN, AND W. WILCZYNSKI. 1992. Signal redundancy and receiver permissiveness in acoustic mate recognition by the túngara frog, *Physalaemus pustulosus*. Am. Zool. 32:81–90.

RICE, W. R. 1989. Analyzing tables of statistical tests. Evolution 43:223–225.

RYAN, M. J. 1980. Female mate choice in a neotropical frog. Science 209:523–525.

RYAN, M. J. 1985. The túngara frog: A study in sexual selection and communication. Univ. Chicago Press, Chicago.

RYAN, M. J. 1990. Sensory systems, sexual selection, and sensory exploitation. Oxford Surveys Evolut. Biol. 7:157–195.

RYAN, M. J. 1996. Phylogenetics in behavior: some cautions and expectations. Pages 1–21 *in* Phylogenies and the comparative method in animal behavior (E. P. Martins, ed.). Oxford Univ. Press, New York.

RYAN, M. J., M. D. TUTTLE, AND A. S. RAND. 1982. Sexual advertisement and bat predation in a Neotropical frog. Am. Nat. 119:136139.

RYAN, M. J., R. B. COCROFT, AND A. S. RAND. 1990a. The role of environmental selection in intraspecific divergence of mate recognition signals in the cricket frog, *Acris crepitans*. Evolution 44:1869–1872.

RYAN, M. J., J. H. FOX, W. WILCZYNSKI, AND A. S. RAND. 1990b. Sexual selection for sensory exploitation in the frog *Physalaemus pustulosus*. Nature 343:66–67.

RYAN, M. J., AND A. S. RAND. 1993. Sexual selection and signal evolution: The ghost of biases past. Philos. Trans. Royal Soc. Ser. B. 340:187–195.

RYAN, M. J., AND A. S. RAND. 1995. Female responses to ancestral advertisement calls in túngara frogs. Science 269:390–392.

RYAN, M. J., A. S. RAND, AND L. WEIGT. 1996. Geographic variation in allozyme and advertisement calls in the túngara frog, *Physalaemus pustulosus*. Evolution 50:2435–2453.

RYAN, M. J., AND W. WILCZYNSKI. 1988. Coevolution of sender and receiver: Effect on local mate preference in cricket frogs. Science 240:1786–1788.

RYAN, M. J., AND W. WILCZYNSKI. 1991. Evolution of intraspecific variation in the advertisement call of a cricket frog (*Acris crepitans*, Hylidae). Biol. Journal Linn. Soc. 44:249–271.

SHAW, K. L. 1996a. Sequential radiations and patterns of speciation in the Hawaiian cricket genus *Laupala* inferred from DNA sequences. Evolution 50:237–255.

SHAW, K. L. 1996b. Polygenic inheritance of a behavioral phenotype: Interspecific genetics of song in the Hawaiian cricket genus *Laupala*. Evolution 50:256–266.

STEEL, M. A., AND D. PENNY. 1993. Distributions of tree comparison metrics—Some new results. Syst. Biol. 42:126–141.

SWOFFORD, D. L. 1991. When are phylogeny estimates from molecular and morphological data incongruent? Pages 295–333 *in* Phylogenetic analysis of DNA sequences (M. M. Miyamoto and J. Cracraft, eds.). Oxford Univ. Press, New York.

SWOFFORD, D. L. 1993. PAUP: Phylogenetic analysis using parsimony, version 3.1. Formerly distributed by the Illinois Natural History Survey, Champaign, Illinois.

SWOFFORD, D. L., J. L. THORNE, J. FELSENSTEIN, AND B. M. WIEGMANN. 1996. The topology-dependent permutation test for monophyly does not test for monophyly. Syst. Biol. 46:575–579.

TEMPLETON, A. R. 1983. Phylogenetic inference from restriction endonuclease cleavage site maps with particular reference to the humans and apes. Evolution 37:221–244.

WHEELER, W. C., AND D. GLADSTEIN. 1992. MALIGN. American Museum of Natural History, New York, New York.

WIENS, J. J. 1995. Polymorphic characters in phylogenetic analysis. Syst. Biol. 44:482–500.

WILCZYNSKI, W., A. S. RAND, AND M. J. RYAN. 1995. The processing of spectral cues by the call analysis system of the túngara frog, *Physalaemus pustulosus*. Anim. Behav. 49:911–929.

WIMBERGER, P. H., AND A. DE QUEIROZ. 1996. Comparing behavioral and morphological characters as indicators of phylogeny. Pages 203–233 *in* Phylogenies and the comparative method in animal behavior (E. P. Martins, ed.). Oxford Univ. Press, New York.

ZAR, J. 1974. Biostatistical analysis. Prentice Hall, Englewood Cliffs, New Jersey.

Received 4 June 1997; accepted 10 August 1997
Associate Editor: A. Larson

APPENDIX 1

Collection localities for tissue samples: *Physalaemus coloradorum*—Ecuador: Pichincha: Tinalandia and vicinity. *Physalaemus enesefae*—Venezuela: Calabozo. *Physalaemus ephippifer*—Brazil: Pará: vicinity of Belem. *Physalaemus freibergi*—Peru: Madre de Dios: Tambopata, Explorer's Inn. *Physalaemus petersi*—Ecuador: Napo: Jatun Sacha. *Physalaemus pustulatus*—Ecuador: El Oro: approx. 10 km E Pasaje. *Physalaemus pustulosus*—Panama: Panama: Gamboa. *Physalaemus* sp. A—Brazil: Roraima: Macajai, 66 km S Boa Vista. *Physalaemus* sp. B—Peru: Lambayeque: Olmos, 8.5 km N Motupe. *Physalaemus* sp. C—Ecuador: Esmeraldas: Porto Viejo.

APPENDIX 2

Morphological characters used in phylogenetic analysis follow. Most of these are discussed in Cannatella and Duellman (1984).

1. Relative length of first and second finger. 0: First finger shorter than second finger when adpressed. 1: First finger equal in length or longer than second when adpressed.
2. Tarsal tubercle. 0: Present. 1: Absent
3. Flank gland. 0: Absent. 1: Broad and flat, concealed beneath skin. 2: Narrow, shorter, and protruding above skin.
4. Parotoid gland. 0: Absent. 1: Present.
5. Skin texture. 0: Smooth, at times with folds. 1: Warty, tuberculate.
6. Shape of snout. 0: Snout not protruding beyond tip of upper jaw. 1: Snout protruding beyond tip of upper jaw.
7. Black inguinal blotches. 0: Absent. 1: Present.
8. Dentigerous processes of vomer. 0: Flat and wide. 1: Thin and spikelike.
9. Teeth on the maxilla and premaxilla. 0: Present. 1: Absent.
10. Shape of the stalk of the alary process of the hyoid. 0: Stalk wide. 1: Stalk very narrow.
11. Insertion of petrohyoideus anterior muscle. 0: Along midline of hyoid plate. 1: Along edge of hyoid plate.
12. Anterior process of hyale. 0: Well developed and prominent. 1: Weakly developed.

APPENDIX 3

Data matrix used in phylogenetic analysis follows. Analysis of the ALLOZYME and CALLS partitions requires step matrices, which are available in the NEXUS file at http://www.utexas.edu/depts/systbiol.

```
[            Allozyme                    Morphology    Calls                          12S  begins   ]
sp. A        1311101001111111275?1101111 000000000000  5 1 0 3 7 3 6 ? 3 4 5 4        AAAGGTTTGGTCCTAGCCTTGAA
ephippifer   2112201001211142173?7242211 000000000000  4 2 1 2 6 6 4 ? 2 3 3 3        AAAGGTTTGGTCCTAGCCTTGAA
enesefae     6712511021711117622622211 19 000000000000  8 3 3 5 8 8 5 5 4 7 8 7        AAAGGTTTGGTCCTAGCCTTTAA
pustulosus   5315111010512074321215255 44 101110011001  6 2 0 0 5 4 2 1 0 0 7 6        AAAGGTTTGGTCCTAGCCTTAAA
petersi      2212301020311053414133233 22 101111111001  3 6 5 0 1 1 1 0 0 0 4 1        AAAGGTTTGGTCCTAGCCTTAAA
freibergi    2213300020411013413313144 33 101111111001  0 7 6 0 0 0 0 0 0 1 0 0        AAAGGTTTGGTCCTAGCCTTAAA
coloradorum  4633220030614016232261388 77 011110010110  2 5 4 1 2 5 7 2 1 2 2 1        AAAGGTTTGGTCCTAGCCTTTAA
pustulatus   3433211140603063242343366 55 012110010110  1 4 2 0 3 7 8 4 3 6 1 2        AAAGGTTTGGTCCTAGCCTTGAA
sp. B        4514412000711015256251277 66 011110010110  7 0 0 4 4 2 3 3 3 5 6 5        AAAGGTTTGGTCCTAGCCTTGAA
sp. C        4423210000811018277?8429968 012110010110  ? ? ? ? ? ? ? ? ? ? ? ?        AAAGGTTTGGTCCTAGCCTTGAA

sp. A        ATCAATTATTACTTAATATACACATGCAAGTATCCGCACCCCTGTGAAAACGCCCTTTACT--CCCCC-ACGGGACAAGGAGCTGGTATCAGGCCCGAAA
ephippifer   ATCAATTATTACTTAATATACACATGCAAGTATCCGCACCCCTGTGAAAACGCCCTTTACT--CCCCC-ACGGGACAAGGAGCTGGTATCAGGCCCGAAA
enesefae     ATCAATTATTACTTAATTTACACATGCAAGTATCCGCACCCCTGTGAAAACGCCCTTTATTTT--CTC-ACGAAACAAGGAGCTGGTATCAGGCCCGAAT
pustulosus   ATCAATTATTTCTTAATATATACATGCAAGTCTCAGCCCCCCTGTGAAAACGCCC-TTAAATA--CCCTCTAGGATAAGGAGCTGGTATCAGGCACGAAA
petersi      GTCAATTATTTCTTAATATACACATGCAAGTATCAGCCCTCCTGTGAAAACGCCC-TTAATTTTCCCCATTAGGATAAGGAGCTGGTATCAGGCACAAAA
freibergi    GTCAATTACTTCTTAATATACACATGCAAGTATCAGCCCTCCTGTGAAAACGCCC-TTATTTTTCCCCATTAGGGATAGGAGCTGGTATCAGGCACAAAA
coloradorum  GTCAATTACTTCTTAATATACACATGCAAGTATCCGCCCCCCTGTGAAAACGCCC-TTAAAT---CCCAATAGGATAAGGAGCTGGTATCAGGCACGAAA
pustulatus   GTCAATTACTTCTTAATATACACATGCAAGTATACGCTCCCCTGTGAAAACGCCC-TTAAAT---CCCTATAGGATAAGGAGCTGGTATCAGGCACGAAA
sp. B        ATCAATTATTTCTTAACATACACATGCAAGTATTCAGCCCCCTGTTGAAACGCCC-TTAAAT---CCCTATAGGATAAGGAGCTGGTATCAGGCACGAAA
sp. C        ATCAATTATTTCTTAATATACACATGCAAGTATCCGCTACCCTGTGAAAACGCCC-TTAAAA---CCCTATAGGATAAGGAGCTGGTATCAGGCACGAAA

sp. A        TCCTGCCCAAGACACCTAGCTATGCCACACCCACAAGGGAACT-CAGCAGTGATTAACATTAAGTATAAGCGACACGTTGACTTAGTCAAAGTAAAGAGA
ephippifer   TTCTGCCCAAGACACCTAGCTATGCCACACCCACAAGGGAACT-CAGCAGTGATTAACATTAAACATAAGCGACACGTTGACTTAGTTAAAGTAAAGAGA
enesefae     TTCTGCCCAAGACACCTAGCTATGCCACACCCACAAGGGAACC-CAGCAGTGATTAACATTAAACATAAGCGACACGTTGACTTAGTTAAAGTAAAGAGA
pustulosus   TTCTGCCCAAAACACCTAGCTATGCCACACCCACAAGGGAATT-CAGCAGTAATTAACATTGAATATAAGCGCCAGCTTGATTCAGTTAAAGAAAATAGA
petersi      TA-TGCCCAAAACACCTAGCTATGCCACACCCACAAGGGAACT-CAGCAGTGATTAACATTAAACATAAGCGCCAGCTTGATTTAGTTAAAGAAAATAGA
freibergi    TA-TGCCCAAAACACCTAACTACTCCACACCCACAAGGGAACT-CAGCAGTGATTAACATTAAATATAAGCGCCAGCTTGATTTAGTTAAAGAAAACAGA
coloradorum  TTCTGCCCAAGACACCTAGCTATGCCACACCCACAAGGGAACTTCAGCAGTGATTAACATTGAACATAAGCGACACGTTGACTCAGTTAAAGAAAAGAGA
pustulatus   CTCTGCCCAAAACACCTAGCTATGCCACACCCACAAGGGAATT-CAGCAGTGATTAACATTGAACATAAGCGACAGCTTGACTCAGTTAAAGAAGAGAGA
sp. B        TTCTGCCCAAAACACCTAGCTATGCCACACCCACAAGGGAACT-CAGCAGTGATTAACATTGAGCATAAGCGATAGCTTGACTCAGTTAAAGAAAAGAGA
sp. C        TTCTGCCCAAAACACCTAGCTATGCCACACCCACAAGGGAACT-CAGCAGTGATTAATATTGAGCATAAGCGTCAGCTTGACTCAGTTAAAGAAAAGAGA

sp. A        ACCGGCTAATCTGGTGCCAGCCGCCGCGGTTACACCAAGTGGTTCAAATTGATTCTTATCGGCGTAAAGCGTGATTAAAGTATTATATAATTGCAGTTGA
ephippifer   ACCGGCTAATCTGGTGCCAGCCGCCGCGGTTACACCAAGTGGTTCAAATTGATTCTTTTCGGCGTAAAGCGTGATTAAAGTATTATATAATTGCAGTTGA
enesefae     ACCGGCTAATCTGGTGCCAGCCGCCGCGGTTACACCAGATGGTTCAAATTGATTCTTATAGGCGTAAAGCGTGATTAAAGTATTATATAATTGTAGTTGA
pustulosus   GCCGGCTAATCTGGTGCCAGCCGCCGCGGTTACACCACGTGACTCAAATTGATTTCATTCGGCGTAAAGCGTGATTTAAGCACTAAAAAATTAAAGTTAA
petersi      GCCGGCAAATCTGGTGCCAGCCGCCGCGGTTACACCACGTGACTCAAATTGATTTATATCGGCGTAAAGCGTGATTTAAGAGTATTAAGATTGAAATTAA
freibergi    GCCGGCAAATCTGGTGCCAGCCGCCGCGGTTACACCAAGTGACTCAAATTGACCTACATCGGCGTAAAGCGTGATTTAAGAGTCTTTAAATTGAAATTAA
coloradorum  GCCGGCAAATCTGGTGCCAGCCGCCGCGGTTACACCACGTGACTCAAATTGACCTTAGTCGGCGTAAAGCGTGATTAAAGTTTAAACAAATTAAAGTTAA
pustulatus   GCCGGCAAATCTGGTGCCAGCCGCCGCGGTTACACCACGTGACTCAAATTGACCTCTATCGGCGTAAAGCGTGATTAAAGTTTAAATAAATTGAAGTTGA
sp. B        GCCGGCAAATCTGGTGCCAGCCGCCGCGGTTACACCACGTGACTCAAATTGAACTCAATCGGCGTAAAGCGTGATTAAAGTCCCACAATATTGAAGTTAA
sp. C        GCCGGCAAATCTGGTGCCAGCCGCCGCGGTTACACCACGTGACTCAAATTGAATTCAATCGGCGTAAAGCGTGATTAAAGTCTCATGACATTGAAGTTAA

sp. A        ACATAAATTAAGCTGTGACACGCTTATTTATCTGAAAACCATAAACGAAAGTTACTTCAATTAACCCCACTTGAACTCACGACAGTTAGGACACAAACTG
ephippifer   ACATAAATTAAGCTGTGACACGCTTATTTATCTGAAAACCATAAACGAAAGTTACTTCAATTAACCCCACTTGAACTCACGACAGTTAGGACACAAACTG
enesefae     ACATAAATTAAGCTGTAACACGCTTATTTATTTGAAAACCATAAACGAAAGTTACTTCAATTAACCCAACTTGAACTCACGACAGTTAGGACACAAACTG
pustulosus   ACTTAAACTAAGCTGTGACACGCTTCTTTTTAAGAAAACCTAATACGAAAGTTACTTTAATTATTACCACTTGAATTCACGACAATTAGAACACAAACTG
petersi      ATTTTAATTAAGCTGTAACACGCTTGTTTTTAAGAAAACCAAACACGAAAGTTATTTCAATTATCTCCACTTGAATTCACGACAATTAGGATACAGACTG
freibergi    ATTACAATTAAGCTGTAACACGCTTGTTTGTAAGAAAACCTGATACGAAAGTTACTTCAACTTGATCTACTTGAATTCACGACAATTAGGACACAAACTG
coloradorum  ACTAAAATTAAGCTGTGACACGCTTATTTTAAGGAAAACCTGAAACGAAAGTTACTTTAACTTAATCTACTTGAACTCACGACAATTAGGACACAAACTG
pustulatus   ACTAAAATTAAGCTGTGACACGCTTATTTTAAAGAAAACCTAATACGAAAGTTACTTTAACTAAATCTACTTGAACTCACGACAATTAGGATACAAACTG
sp. B        ACTAGAACTAAGCTGTGACACGCTTGTTCTTAAGAAAATCTTATACGAAAGTTACTCCAACCAAATCCACTTGAATTCACGACAATTAGGACACAAACTG
sp. C        ACTAGAACTAGGCCGTGACACGCTTGTTCTTAAGAAAACCTGATACGAAAGTTACTTCAACTTGATCTACTTGAATTCACGACAATTAGGACACAAACTG

sp. A        GGATTAGATACCCCACTATGCCTTAACCGTAAACTTTAACTTACTCTTTAATCGCCAGGGAACTACGAGCAAAGCTTAAAACCCAAAGGACTTGACGGTA
ephippifer   GGATTAGATACCCCACTATGCCTTAACCGTAAACTTTAACTTACTCTTTTATCGCCAGGGAACTACGAGCAAAGCTTAAAACCCAAAGGACTTGACGGTA
enesefae     GGATTAGATACCCCACTATGCCTTAACCGTAAACTTTAACTTACTCTTTAATCGCCAGGGAACTACGAGCAAAGCTTAAAACCCAAAGGACTTGACGGTA
pustulosus   GGATTAGATACCCCACTATTGC-TAATCGTAAACTTTAACGGACACCTTGCTCGCCCGGGAACTACGAGCAAAGGTTAAAACCCAAAGGACTTGACGGTA
petersi      GGATTAGATACCCCACTATGCC-TAATCGTAAACTTTAATTTACACTAACATCGCCAGGGAACTACGAGCAAAGCTTAAAACCCAAAGGACTTGACGGTA
freibergi    GGATTAGATACCCCACTATGCC-TAATCGTAAACTTTAATTTACACTAATATCGCCAGGGAACTACGAGCAAAGCTTAAAACCCAAAGGACTTGACGGTA
coloradorum  GGATTAGATACCCCACTATGCC-TAATCGTAAACCTTAACTTACATTATCATCGCCAGGGAACTACGAGCAAAGCTTAAAACCCAAAGGACTTGACGGTA
pustulatus   GGATTAGATACCCCACTATGCC-TAATCGTAAACCTTAATTTACATAAATATCGCCAGGGAACTACGAGCAAAGCTTAAAACCCAAAGGACTTGACGGTA
sp. B        GGATTAGATACCCCACTATGCC-TAATCGTAAACCTTAACTTACACCAATATCGCCGGGGAACTACGAGCAAAGCTTAAAACCCAAAGGACTTGACGGTA
sp. C        GGATTAGATACCCCACTATGCC-TAATCGTAAACCTTAATTTACACTAACATCGCCAGGGAACTACGAGCAAAGCTTAAAACCCAAAGGACTTGACGGTA

sp. A        CCCCACATCCACCTAGAGGAGCCTGTCCTATAATCGATAATCCCCGCTTAACCTCACCACCTTTAGC-TACTCAGCCTGTATACCTCCGTCGTCAGCTTA
ephippifer   CCCCACATCCACCTAGAGGAGCCTGTCCTATAATCGATAATCCCCGCTTAACCTCACCACCTTTAGC-TACTCAGCCTGTATACCTCCGTCGTCAGCTTA
enesefae     CCCCATATCCACCTAGAGGAGCCTGTCCTGTAATCGTAACTCCCCGCTTAACCTAACCACCTTTAGC-TACTCAGCCTGTATACCTCCGTCGTCAGCTTA
pustulosus   CCCCAAATCCACCTAGAGGAGCCTGTCCTATAATCGATAACCCCCGTTTAACCTCACCACCCCTAG-TTACTCAGCCTGTATACCTCCGTCGTCAGTTTA
petersi      CCCCAAATCCACCTAGAGGAGCCTGTCCTATAATCGATAACCCCCGTTAAACCTCACCACTTCTAGCTTA-TCAGCCTGTATACCTCCGTCGTCAGCTTA
freibergi    CCCCAAATCCACCTAGAGGAGCCTGTCCTATAATCGATAACCCCCGTTAAACCTCACCACTTCTAGCTTA-TCAGCCTGTATACCTCCGTCGTCAGCTTA
coloradorum  CCCCAAATCCACCTAGAGGAGCCTGTCCTATAACCGATACCCCCCGTTTAACCTCACCACTTTTAGCCT-CTCAGCCTGTATACCTCCGTCGTCAGCTTA
pustulatus   CCCCAAATCCACCTAGAGGAGCCTGTCCTATAACCGATACCCCCCGTTTAACCTCACCATTTTTAGCTT-CTCAGCCTGTATACCTCCGTCGTCAGCTTA
sp. B        CCCCAAATCCACCTAGAGGAGCCTGTCCTATAACCGATACCCCCCGTTTAACCTCACCATTTTTAGCCT-CTCAGCCTGTATACCTCCGTCGTCAGCTTA
sp. C        CCCCAAATCCACCTAGAGGAGCCTGTCCTATAATCGATACCCCCCGTTTAACCTCACCATTTTTAGCCTA-TCAGCCTGTATACCTCCGTCGTCAGCTTA
```

```
sp. A        CCACGTGAGCGAACATTAGTGAGCTTAATGTCTTTACATCAATACGTCAGGTCAAGGTGCAGCATATGAGGTGAGAAGAGATGGGCTACACTTTCTAAAT
ephippifer   CCACGTGAGCGAACATTAGTGAGCTTAATGTCTTTACATCAATACGTCAGGTCAAGGTGCAGCATATGAGGTGAGAAGAGATGGGCTACACTTTCTAAAT
enesefae     CCACGTGAGCGAACATTAGTGACGTTAATGTCTTTACATCAATACGTCAGGTCAAGGTGCAGCATATAAGGTGAGAAGAGATGGGCTACACTCTCTAAAA
pustulosus   CCACGTGAGCGAGCTATAGTGAGCTTAATGTCATTACATCAATACGTCAGGTCAAGGTGCAGCACATGAGGTGGGAAGAGATGGGCTACACTTTCTATAC
petersi      CCTCGTGAGCGAATCATAGTGAGCCTAATGCTTATACACCAACACGTCAGGTCAAGGTGCAGTATATGAAGTGGGAAGAGATGGGCTACACTTTCTAATT
freibergi    CCTCGTGAGCGAATCATAGTGAGCCTAATGCTTATTCACCAACACGTCAGGTCAAGGTGCAGCATATGAAGCGGGAAGAGATGGGCTACACTTTCTAACT
coloradorum  CCACGTGAGCGAACACTAGTGAGCCTAATGCCCACACGCCAACACGTCAGGTCAAGGTGCAGCATATGAAGTGGAAAGAGATGGGCTACACTTTCTAATA
pustulatus   CCACGTGAGCGAACACTAGTGAGCCTAATGCCCTTACACCAACACGTCAGGTCAAGGTGCAGCATATGAAATGGAAAGAGATGGGCTACACTTTCTAGCA
sp. B        CCACGTGAGCGAACACTAGTGACGTCAATGTCACTACATCAATACGTCAGGTCAAGGTGCAGTATATAAAATGGGAAGAGATGGGCTACACTTCTCTAGTA
sp. C        CCACGTGAGCGAACATAAGTGACGTTAATGCCATTACACCAACACGTCAGGTCAAGGTGCAGTATATAAAATGGGAAGAGATGGGCTACACTCTCTAATA

sp. A        TAGAAAATACGAAAAACTACTCATGAAACTTAGTTTGCAGGCGGATTTAGAAGTAAAGAGAAATAAGAGAGTTCTCTTTAACTTGGCACTGGGGTGTGTA
ephippifer   TAGAAAATACGAAAAACTACCCATGAAACTTAGTTTGAAGGCGGATTTAGAAGTAAAGAGAAATAAGAGTGTTCTCTTTAACTTGGCACTGGGGTGTGTA
enesefae     TAGAATAAACGAAAAACTACTTATGAAATCTAGTTTGAAGGCGGATTTAGAAGAAAGAGAAACAAGAATTGTTCTCTTTAACTTGGCACTGGGGTGTGTA
pustulosus   TAGAATATACGAAAAATTACCTATGAAAATAAATTTGAAGGCGGATTTAGAAGTAAAGAAAAACAAGAGCGTTTTCTTTAACTACCCACTGGGGTGTGTA
petersi      TAGAACATACGAAAAATTATTTATGAAAACTAATTTGAAGGCGGATTTAGAAGTAGAAAGAAATTAGTGTATTCTTTTTAACCCGGCACTGGGGTGTGTA
freibergi    TAGAACATACGAAAAATTATTTATGAAAACTAATTTGAAGGCGGATTTAGAAGTAAAAAGAAATCAGTGTATTCTTTTTAACCTGGCACTGGGGTGTGTA
coloradorum  TAGAACACACGAAAGACTACCTATGAAACCTAGTCTGAAGGCGGATTTAGAAGTAAAAAAAAACAAGAGCGTTTTCTTTAACTAGGCACTGGGGTGTGTA
pustulatus   TAGAACATACGAAAGACTATTTATGAAATCTAGTCTAAAGGCGGATTTAGAAGTAAAAAAAAACAAGAGCGTTTTTTTTAACTTGGCACTGGGGTGTGTA
sp. B        TAGAACATACGAAAGACTATTTATGAAATCTAGTCTAAAGGCGGATTTAGAAGTAAAGAAAAACAAGAGCGTTTTCTTTAACTAGGCACTGGGGTGTGTA
sp. C        TAGAACATACGAAAGACTATTTATGAAATCTAGTCCAAAGGCGGATTTAGAAGTAAAGAAAAACAAGAGCGTTTTCTTTAACAAGGCACTGGGGTGTGTA

sp. A        CACACGCCCGTCACCCTCTTCAAAGCTAATTTTAAGTTTTTAACTATTTAATGCAATAATAGAAGAGGCAAGTCGTAACATGGTAAGTATACCGGAAGTG
ephippifer   CACACGCCCGTCACCCTCTTCAAAGCTAATTTTAAGTTTTTAACTATTTTATGCAACAATAGAAGAGGCAAGTCGTAACACGGTAAGTATACCGGAAGTG
enesefae     CACACGCCCGTCACCCTCTTCAAAGCTACTTTTAAGTTCTTAACTAAATTTTGCATCTATAGAAGAGGCAAGTCGTAACATGGTAAGTATACCGGAAGTG
pustulosus   CACACGCCCGTCACCCTCTTCAAAGCTAACTTATAGTATATAACTACATCCTGCTATTCAGACAGAGGCAAGTCGTAACATGGTAAGTATACCGGAAGTG
petersi      CACACGCCCGTCACCCTCTTCAAGGCCTATTTATAGTATTTAACTAAA-TTTGCTATTCAGA-AGAGGCAAGTCGTAACATGGTAAGTGTACCGGAAGTG
freibergi    CACACGCCCGTCGCCCTCTTCAAAGCTCAATTATAGTATTTAACTAAA-TCTGCTATTCAGA-AGAGGCAAGTCGTAACATGGTAAGTGTACCGGAAGTG
coloradorum  CACACGCCCGTCACCCTCTTCAAAGCTTACTTATAGTAACTAGCCTAAATTTGCTAAACAGA-AGAGGCAAGTCGTAACATGGTAAGTATACCGGAAGTG
pustulatus   CACACGCCCGTCACCCTCTTCAAAGCTTACTTACAGTAATTAACCAAAATTTGCTGGA-TAGAAGAGGCAAGTCGTAACATGGTAAGTATACCGGAAGTG
sp. B        CACACGCCCGTCACCCTCTTCAAAGCTTATTTATAGTAACTAACCTAACTTTGCTATA-TAGAAGAGGCAAGTCGTAACATGGTAAGTATACCGGAAGTG
sp. C        CACACGCCCGTGACCCTCTTCAAAGCTTATTTTTAGTAATTAACTTAACCTTGCTACA-TAGAAGAGGCAAGTCGTAACATGGTAAGTATACCGGAAGTG

sp. A        TGCTTGGAAACGAAACGTAGCTTAACCTAAAGCATTTCGCTTACACCGAAAAAATATCTGTGAAAACCCGATCGTTTCGAGCAAAATATTTAGCCCTCAT
ephippifer   TGCTTGGAAACGAAACGTAGCTTAACTTAAAGCATTCCGCTTACACCGAAAAAATATCCGTGAAAACCCGATCGTTTCGAGCAAAATATTTAGCCCATAC
enesefae     TGCTTGGAAACGAAACGTAGCTTAAATTAAAGCATTTCGCTTACACCGAAAAAATATCTGTGAAAACCTGTCGTTTCGAGTCAAAAAATTTAGCCCACAT
pustulosus   TGCTTGGAAACAAAATGTAGCTTAAC-TAAAGCACCTTGCTTACACCGAGAAAATGTGTGTGAAAACCAAATCATTTTGAGCCAAAGATATAGCCCTATT
petersi      TGCTTGGAAACAAAACGTAGCTTAA-TTAAAGCATCTTGCTTACACCAAGAAAATGTATGTGAAAACCATACCGTCTTGAGCTAAAAACTTAGCCTTACC
freibergi    TGCTTGGAAACAAAACGTAGCTTAA-TTAAAAGCATCTGCTTACACCAAGAAAATGTATGTGAAAACCAAACCGTCTTGAGCTAAAAATTTAGCCTTACT
coloradorum  TGCTTGGAAACGAAACGTAGCTTAAC-TAAGGCATCTCGCTTACACCGAGAAAATGTGTGTGAAAACCAAACCGATTCGAGCTAAAAATATAGCCTTATA
pustulatus   TGCTTGGAAACAAAATGTAGCTTAAC-TAAAGCACCTTGCTTACACCGAGAAAATGTATGTGAAAACCAAACCGATTCGAGCTAAAAAGATAGCCTTATT
sp. B        TGCTTGGAAACGAAACGTAGCTTAACC-AAAGCATCTCGCTTACACCGAGAAAATGTATGTGAAAACCAAACCGATTCGAGCTAAAAATCTAGCCTTATA
sp. C        TGCTTGGAAACGAAGCGATACGTTAACCAAAGCATCTCGCTTACACCGAGAAAATGTGTGTGAAAATCAAACCGATTCGAGCTAAAAATCTAGCCTTACT

sp. A        TAA--CCTATGAAGACCAATTTTTTA---AAATTTTAATTAAATCATTCTATTAG-CCTAGTAAAGGGGATTAAAAAGCCTGTAGGAGCTATAAATCTAG
ephippifer   AAC--CATATGAAAACCAATTTTTTA---AACTTTTAATTAAATCATTCTATTAG-CCTAGTAAAGGGGATTAAAAAGCCTGTAGGAGCTATAAATCTAG
enesefae     TTA--CTTATATTAACCAATTTTTAT---ATACTTCAATTAAATCATTTTATCTG-CCT-GTAAAGGAGATTGAAAGGCCTACAGGAGCTATAAACCTAG
pustulosus   AAATTTAATAAAAACACTCTTATATA---TTTATT-AATTAAAGCATTTACCTAA-CTTAGTATAGGAGATAAAAAAGTTTTTTAGCGCAATAAAC-AAG
petersi      CTACAATTATATTTACCCTATTTTAC---TTACACAAAATAAAACATTCTTTAAG-CTTAGTAAAGGAGATAAAAAAGTTTTTTAGAGCTATAAAATAAG
freibergi    CTACAATTATACTCATTCTATTTTAC---TTACACAAAATAAAACATTCTTTAAA-CTTAGTAAAGGAGATAAAAAAGTTTTTTAGAGCTATATTATAAG
coloradorum  TAATCCTAATGTAAAACCCCTTTTAC---ACAATTAAATTAAAACATTTTATAAAACTTAGTAGGGGAGGTTAAAAAGTTTCTTAGAGCTATAACAATAG
pustulatus   ATCACCTAATGCATTAACCTTCATAT---ATAATTCAATTAAAACATTTTTTTGA-CCTAGTAAAGGAGATTAAAAAGTTTCTTAGAGCTATAATAATAG
sp. B        TTTCCCTAATAAAAACCCCTTCTCCCATTATAACCAAATTAAAACATTTTTTAAA-CTTAGTAAAGGAGATTAAAAAGTTTCTTAGAGCTATAATAATTG
sp. C        CCCTTCTAATGAAAAATTCTTCTTTTCCCATAAACAA-CTAAAACATTTTTTAAA-CCTAGTAAAGGAGATTAAAAAGTTTTTCAGAGCTATAATAATTG

sp. A        TACCGCAAGGGAATAATGAAATAAAAATGAAAAAC--CTTAAGCACAATAAAGTAAAGATCAACTCTTGTACCTTTTGCATCATGGTCTAG
ephippifer   TACCGCAAGGGAATAATGAAATAAAAATGAAAAAC--CTTAAGCACGATAAAGTAAAGATTAACTCTTGTACCTTTTGCATAATGGTCTAG
enesefae     TACCGCAAGGGAATAATGAAATAAAAATGAAAAAC--TTTAAGCATATTATAGTAGAGATTAATTCTCGTACCTTTTGCATAATGGTCTAG
pustulosus   TACCGCAAGGGAAATATGAAATAGAAATGAAATAAAAATTAAGCATAAAATAGCAGAGCCTTACCCTCGTACATTTTGCATAATGGTCTAG
petersi      TACCGCAAGGGAAAAATGAAATAAAAATGAAACAAAATTCAAGCATAATATAGTAGAGTTTTCCCCTCGTACCTTTTGCATAATGGTCTAG
freibergi    TACCGCAAGGGAAAAATGAAATAAAAATGAAATAAAATTAAAGCATAATATAGTAGAGATTCCCCCTCGTACCTTTTGCATCATGGTCTAG
coloradorum  TACCGCAAGGGATGTGTGAAATAAAAATGAAATAAAACTCAAGCAATAAAAAGTAAACCTTAACCCTTGTACCTTTTGCATCATGGTCTAG
pustulatus   TACCGCAAGGGAAATATGAAATAAAAATGAAATAAAACTCAAGCAATAAAAAGTAAAGTTCAACCCTTGTACCTTTTGCATCATGGTCTAG
sp. B        TACCGCAAGGGAAAGATGAAATAAAAATGAAATAAAATTAAAGCAGTAAAAAGTAGAGCTTTACTCTCGTACCTTTTGCATAATGGTCTAG
sp. C        TACCGCAAGGGATAGATGAAATAAAAATGAAACAAAATTAAAGCAATAAAAAGTAGAGCCTTACCCTCGTACCTTTTGCATCATGGTCTAG
```

```
[            COI begins  ]
sp. A        CACCCTGAAGTTTATATTCTAATTCTTCCAGGTTTTGGNATTATTTCTCATATTGTAACCTATTATTCGAGTAAAAAAGAACCATTTGGATATATGGGAA
ephippifer   CACCCTGAAGTTTATATCCTTATTCTTCCAGGTTTTGGAATTATTTCTCATATCGTAACCTATTATTCAAGTAAAAAAGAACCATTCGGATATATGGGTA
enesefae     CATCCTGAAGTTTACATCCTTATTCTACCAGGCTTCGGCATTATCTCTCACATTGTCACTTATTATTCAAGTAAAAAGGAACCGTTTGGCTACATGGGAA
pustulosus   CACCCAGAAGTTTATATTTTAATTCTCCCAGGATTTGGAATTATTTCCCATATTGTTACATACTACTCAAGTAAAAAGGAACCTTTTGGTTATATAGGCA
petersi      CATCCAGAAGTTTACATCTTAATTCTCCCTGGGTTTGGTATTATTTCCCATGTTGTCACTTATTATTCAAGCAAAAAAGAACCTTTTGGTTATATAGGTA
freibergi    CACCCAGAAGTATATATTTTAATTCTCCCCGGCTTCGGTATTATTTCCCATGTTGTCACTTATTACTCAAGTAAAAAAGAACCTTTTGGTTATATAGGAA
coloradorum  CATCCAGAAGTTTATATCCTTATTCTCCCCGGTTTGGGCATTATCTCCCACATTGTAACATATTACTCAAGTAAAAAAGAACCTTTCGGATATATGGGAA
pustulatus   CACCCAGAAGTTTACATTCTCATTCTCCCGGGATTTGGTATTATTTCTCACATTGTAACATATTATTCAAGCAAAAAAGAACCTTTTGGTTACATAGGAA
sp. B        CACCCAGAAGTCTATATTCTTATTTTACCCGGCTTCGGAATTATCTCTCATATTGTAACCTATTATTCAAGTAAAAAAGAACCTTTGGGCTACATGGGTA
sp. C        CACCCAGAAGTCTATATTCTTATCTTACCCGGTTTCGGCATTATTTCCCATATCGTAACTTATTATTCCAACAAAAAAGAACCTTTTGGATATATGGGCA

sp. A        TAGTGTGAGCTATAATGTCAATTGGCTTATTAGGCTTTATTGTATGAGCCCATCATATATTTACAACTGACTTAAATGTAGATACACGTGCCTATTTTAC
ephippifer   TAGTGTGAGCTATAATATCTATTGGTTTATTAGGATTTATTGTATGAGCGCATCATATATTCACAACTGATTTAAATGTAGATACACGTGCCTATTTTAC
enesefae     TAGTTTGAGCCATAATATCAATTGGCTTATTAGGTTTTATCGTTTGAGCTCATCATATATTTACAACTGACTTAAACGTAGATACCCGAGCTTATTTTAC
pustulosus   TAGTTTGAGCTATAATATCAATTGGCCTACTTGGCTTTATCGTTTGAGCTCATCATATGTTTACAACTGATCTGAACGTAGACACACGAGCTTATTTTAC
petersi      TAGTATGAGCAATAATATCAATTGGATTACTTGGTTTTATTGTATGAGCACATCATATATTTACTACAGATTTAAATGTAGATACACGAGCCTATTTTAC
freibergi    TGGTTTGAGCAATAATATCTATCGGGTTATTGGGTTTCATTGTATGAGCCCATCACATATTTACCACAGACTTAAATGTAGATACACGAGCCTATTTTAC
coloradorum  TAGTATGAGCAATAATATCTATTGGCTTACTTGGYTTTATTGTCTGAGCACACCATATGTTTACAACAGACCTAAATGTAGACACACGAGCCTATTTTAC
pustulatus   TAGTTTGAGCAATAATATCTATTGGTTTACTTGGTTTTATCGTTTGAGCACACCATATGTTTACAACAGACCTAAATGTAGATACACGAGCTTATTTCAC
sp. B        TGGTCTGAGCAATAATATCTATTGGTCTTTTAGGCTTCATTGTTTGAGCACATCATATATTTACAACGGACCTTAACGTGGATACACGAGCCTACTTCAC
sp. C        TGGTTTGAGCAATGATGTCTATTGGCCTTCTAGGCTTTATTGTTTGAGCACATCACATGTTCACAACAGACCTAAACGTGGATACACGAGCTTATTTCAC

sp. A        ATCAGCAACAATAATTATTGCCATTCCAACTGGAGTCAAAGTCTTTAGCTGATTAGCTACTATGCACGGAGGTATTATTAAATGACATGCCGCTATATTA
ephippifer   ATCAGCAACAATAATTATTGCCATTCCAACTGGGGTTAAAGTCTTTAGTTGATTAGCTACTATGCATGGAGGAATTATTAAATGACATGCCGCTATATTA
enesefae     ATCAGCAACAATAATTATTGCAATCCCAACCGGAGTAAAAGTATTTAGCTGATTAGCTACAATGCATGGAGGTATTATTAAATGACATGCAGCTATGTTA
pustulosus   TTCTGCAACAATAATCATCGCAATTCCAACCGGCGTAAAAGTCTTTAGTTGATTAGCAACTATACATGGGGGTATTATTAAATGACATGCCGCTATATTA
petersi      TTCAGCAACAATAATTATTGCTATTCCAACTGGTGTTAAAGTTTTTAGCTGATTAGCTACTATACACGGGGGAATTATTAAATGACACGCCGCTATACTA
freibergi    TNNNNNNNNNNNNNNNNNNNNNNNNNNNNNNNNNNNNNNNNNGTAAAAGTTTTTAGCTGATTAGCTACTATACATGGGGGAATTATTAAGTGACACGCCGCCATACTT
coloradorum  CTCAGCAACAATAATTATTGCCATTCCCACAGGTGTAAAAGTATTTAGTTGATTAGCTACTATGCACGGAGGAATTATTAAATGACACGCCGCAATACTA
pustulatus   CTCAGCAACAATAATTATTGCTATCCCCACGGGCGTAAAAGTATTTAGTTGATTAGCTACTATGCATGGGGGAATTATTAAATGACACGCCGCAATACTA
sp. B        CTCAGCAACAATAATTATTGCCATTCCTACCGGTGTAAAAGTCTTTAGCTGATTAGCCACTATACATGGGGGAATTATTAAATGACACGCCGCAATACTG
sp. C        CTCCGCAACAATAATTATTGCTATCCCCACTGGTGTTAAAGTATTTAGTTGATTAGCTACTATGCACGGAGGAATTATTAAATGACACGCCGCAATATTA

sp. A        TGGGCTTTAGGGTTTATTTTCCTTTTTACAGTTGGTGGATTAACAGGAATTGTTTTAGCTAACTCATCTCTTGATATTGTTCTTCATGACACTTATTATG
ephippifer   TGAGCTTTAGGATTTATTTTCCTCTTTACAGTTGGTGGGTTAACAGGAATTGTTCTAGCTAATTCATCTCTTGATATTGTTCTTCATGATACTTATTATG
enesefae     TGGGCTTTGGGGTTTATTTTCCTTTTTACAGTTGGAGGATTAACAGGAATTGTTCTAGCCAACTCATCTCTTGATATTGTTCTTCATGATACTTATTACG
pustulosus   TGAGCCTTAGGCTTTATTTTCTTATTTACTGTAGGGGGACTAACAGGCATTGTTCTCGCTAATTCATCTCTAGACATTGTATTACATGATACATATTATG
petersi      TGAGCCCTAGGATTCATTTTCTTGTTTACAGTGGGCGGANTAACAGGTATTGTTCTTGCTAATTCTTCACTGGATATTGTTCTTCATGATACNTATTATG
freibergi    TGAGCCTTAGGATTTATTTTCTTGTTTACAGTAGGCGGACTAACAGGTATTGTTCTTGCTAACTCCTCTCTTGATATTGTACTTCATGATACTTATTACG
coloradorum  TGAGCTCTCGGATTTATTTTTCTATTTACAGTAGGCGGACTGACGGGCATTGTTCTTGCCAATTCTTCTCTAGATATTGTTCTTCATGACACCTATTATG
pustulatus   TGAGCTTTGGGGTTCATCTTTTTATTTACAGTGGGGGGATTAACAGGCATTGTTCTTGCCAACTCTTCCCTAGATATTGTTCTTCATGACACTTACTATG
sp. B        TGAGCTTTAGGATTTATTTTTCTATTTACTGTGGGAGGACTCACAGGCATCGTTCTCGCCAACTCCTCCCTTGACATTGTTCTTCATGACACCTATTACG
sp. C        TGAGCTCTAGGATTTATTTTTCTATTTACTGTTGGAGGACTCACAGGCATTGTTCTTGCCAACTCCTCTCTAGATATTGTCCTTCATGACACCTACTATG

sp. A        TAGTAGCACATTTCCACTATGTTTTATCTATAGGAGCTGTTTTTGCTATTATGGCAGGCTTTGTACACTGATTTCCTCTATTTACTGGATATACACTCCA
ephippifer   TAGTAGCACATTTCCATTATGTTTTATCTATGGGAGCTGTCTTTGCAATTATAGCAGGCTTTGTACACTGATTTCCTTTATTTACTGGGTATACACTCCA
enesefae     TAGTAGCCCACTTCCATTATGTTTTATCTATAGGAGCTGTTTTTGCAATTATAGCAGGTTTTGTGCACTGATTCCCTCTTTTTACTGGTTATACTCTTCA
pustulosus   TTGTAGCCCACTTTCATTATGTTTTGTCTATAGGGGCTGTATTTGCTATTATGGCAGGATTTGTTCATTGATTTCCCCTATTTACAGGTTACTCTCTTCA
petersi      TTGTAGCTCATTTTCACTACGTGTTATCAATAGGAGCCGTATTTGCTATTATAGCAGGATTTGTTCATTGATTTCCTTTATTTACTGGTTATNCCCTTCA
freibergi    TTGTAGCTCATTTTCACTACGTACTATCAATAGGAGCCGTATTTGCTATTATAGCAGGATTTGTTCATTGATTTCCTTTATTTTCTGGTTATACCCTTCA
coloradorum  TGGTAGCTCACTTTCACTATGTCTTATCAATAGGGNCTGTATTTGCTATTATAGCGGGCTTTGTTCACTGATTCCCCTTATTTACCGGATATACTCTTCA
pustulatus   TAGTAGCTCATTTTCACTATGTTTTATCCATGGGGGCTGTATTTACCATTATAGCAGGCTTTATCCATTGATTCCCTTTATTTACTGGATATACTCTTCA
sp. B        TAGTAGCTCACTTTCACTATGTTTTATCCATGGGAACTGTATTTGCTATTATAGCTGGCTTTATTCACTGATTTCCACTATTTACTGGATATACACTTCA
sp. C        TAGTAGCTCATTTTCACTATGTTTTATCTATGGGAGCTGTCTTTGCTATTATAGCCGGTTTTGTACACTGATTTCCTTTATTTACCGGATATACACTTCA

sp. A        CGAAACTTGAACAAAGATTCACTTTGGTGTAATATTTGCTGGT
ephippifer   CGAAACTTGAACAAAGATTCACTTTGGAGTAATATTTNCTGGT
enesefae     CGAAACTTGAACAAAAATTCACTTTGGAGCAATATTTGCTGGG
pustulosus   CGAGACTTGAACAAAAATTCATTTTGGTGTAATATTTGCAGGT
petersi      TGAAACNTGAACCAAAATCCATTTTGGAGTAATGTTTGCAGGA
freibergi    TGAAACTTGAACAAAAATTCACTTTGGGGTGATGTTCGCAGGG
coloradorum  TGAGACTTGAACTAAAATTCACTTTGGAGTAA-----------
pustulatus   TGAGACGTGAACAAAAATCCACTTCGGAGTAATATTTTTTGGA
sp. B        TGAAACCTGAACAAAAATTCACTTTGGTATTATATTTTCAGGA
sp. C        TGAAACCTGAACAAAAATCCACTTCGGAGTTATGTTCNNNNNN
```